Universiteit Antwerpen

This item is the archived peer-reviewed author-version of:

Three-dimensional full-field vibration measurements using a handheld single-point laser Doppler vibrometer

Reference:

Sels Seppe, Vanlanduit Steve, Bogaerts Boris, Penne Rudi.- Three-dimensional full-field vibration measurements using a handheld single-point laser Doppler vibrometer

Mechanical systems and signal processing - ISSN 0888-3270 - 126(2019), p. 427-438

Full text (Publisher's DOI): https://doi.org/10.1016/J.YMSSP.2019.02.024

To cite this reference: https://hdl.handle.net/10067/1582100151162165141

uantwerpen.be

Institutional repository IRUA

*Manuscript

Three-dimensional full-field vibration measurements using a handheld single-point laser Doppler vibrometer

Seppe Sels, Steve Vanlanduit, Boris Bogaerts, Rudi Penne

University of Antwerp, Groenenborgerlaan 171, B-2020 Antwerp, Belgium

Abstract

The laser Dopper vibrometer (LDV) has become a standard instrument to perform high spatial resolution 3D vibration measurements of complex structures. An important step in the LDV measurement procedure is the estimation of the pose of the instrument relative to the test object. Existing LDV pose estimation methods rely on the use of 3D range sensors to perform this task. These sensors are costly and often their spatial resolution and accuracy is too limited for an accurate LDV pose estimation. But most importantly, existing LDV pose estimation techniques are slow. In this paper, we present a novel LDV pose estimation method based on matching of a 2D camera image and a CAD model of the test object. In contrast to existing pose estimation techniques, our method is able to track the pose of the LDV in real-time (up to about 30 LDV positions per second). This means that our method also allows LDV pose estimation when either the LDV or the object is moving. Using the real-time LDV pose tracking we present a new LDV measurement methodology where we hold instrument in our hand while moving around the test structure. This allows us to perform full-field scanning and 3D velocity measurements with a low-cost single point LDV sensor. We show that the measurement accuracy of a stationary handheld LDV measurement is about 40dB (which is about 10dB lower than in the case of measurements on a tripod). Furthermore, we demonstrate that the 3D vibrations measurements using the handheld vibrometer have an error of about 20% compared to classical measurements performed by combining three LDV measurements on a tripod. We illustrate our method on vibration measurements of

a composite bicycle frame.

Keywords: Laser Doppler vibrometer, handheld, scanning, 3D vibration measurement, pose estimation

1. Introduction

Since the advent of the laser in the nineteen sixties people have used the Doppler effect of a laser beam reflected by a vibrating object to remotely measure vibrations [1]. Initially the so-called laser Doppler vibrometer (or LDV) that was used for this task, was quite bulky and required a lot of tuning. But in the two decades that followed its invention, substantial effort was spent on developing 'portable' LDV instruments [2, 3]. Nowadays, accurate laboratory or even industrial in-situ vibration measurements can be performed using compact LDV instruments that are typically placed on a tripod. Recent technological evolutions and typical applications of the LDV can be found in the review articles by Martarelli et al [4] and more recently by Rothberg et al [5].

Single-point vibrometers determine the vibration response at a single point on the test structure in the direction of the laser beam (which is not necessarily equal to the direction of vibration). Scanning vibrometers on the other hand use a galvanometer to steer the laser beam over the surface of the structure to obtain full-field vibration measurements. One problem with scanning laser vibrometry is the registration between the scanning mirror angles and the 3D coordinates of the measuring points [4, 6]. Another important issue is the fact that only measurements in the line-of-sight direction of the vibrometer are obtained [7]. Usually one assumes that the objects' vibrations are mainly out-of-plane and a so-called cosine transform is used to correct for the non-orthogonal measurement direction. In case of in-plane vibrations this can seriously affect the accuracy of the measurements as is shown by Castellini et al [7].

It is possible to reconstruct the actual 3D vibration velocity vector when vibrometer measurements from at least three LDV angles of incidence at the point of interest are measured [8]. An essential piece of information that is

needed to calculate the 3D velocity vectors in that case is the LDV pose (i.e. the position and orientation of the LDV relative to the test object). In recent literature, several methods were proposed to calculate this pose. In [9] a least-squares procedure is introduced to calculate the LDV pose using at least four known 3D point locations. The method was improved in [10] by using a singular value decomposition. The limitation of both techniques is that very accurate 3D point coordinates should be available (because only a limited number of points are used in the estimation procedure). Moreover, the existing pose estimation methods also require significant user interaction. One means of obtaining a large number of 3D point coordinates simultaneously is by using 3D range sensors. Recently, Weekes et al [11] and Sels et al [12] proposed the use of a Kinect camera to perform this task. Unfortunately, both the spatial resolution and the accuracy of the used 3D cameras is too low to allow an accurate pose estimation. Kim et al [13] made use of a more accurate (but also more expensive) laser scanner.

In this paper, we use a novel pose estimation approach using a 2D camera which is attached to the LDV (most scanning LDV sensors already have a camera integrated in the instrument which can be used in our pose estimation method). We determine the pose of the camera (and hence the LDV attached to it) by matching the camera image with a projection of the CAD model of our object. This means that we assume in our method that a CAD model of the structure is available. Our technique does not require any user interaction and it gives the pose of the LDV in real-time (in the experiments described in Section 4 we were able to estimate 30 LDV poses per second). This means that we can also move (rotate or translate) the LDV while updating the pose of the instrument. To our knowledge no current method reported in literature is able to realize this real-time 3D pose tracking of a vibrometer.

When using (scanning or single point) laser vibrometers the LDV is often moved to different locations. This is done for instance to perform 3D measurements (as discussed above), but also to be able to measure parts of the structure for which optical access is possible only from different locations. Laser vibrome-

ters are moved either manually on a tripod [14], or by using a traverse stage [15]. Alternative mobile platform methods include LDV measurements from a vehicle [16], a drone or even robotized measurements [17, 18]. Using a robotized LDV measurement it is possible to obtain full-field 3D measurements of a complete complex object. Unfortunately, robotized LDV systems are very expensive. In this article we will propose a method to obtain full-field 3D measurements by measuring vibrations with a handheld LDV. This is a novel low-cost and simple measurement strategy that allows the user of the LDV to perform measurements on complex structures by walking around the structure and aiming the laser beam at different locations of interest. Because we have access to the LDV pose during the measurement, we were able reconstruct full-field 3D measurements.

The paper is organized as follows: in Section 2 we describe the different steps of the proposed LDV pose estimation procedure that is based on the use of 2D camera images which are matched with a CAD model of our structure-under-test. In Section 3, we illustrate the experimental setup required to perform handheld LDV measurements. In that section, we also show that the signal-to-noise ratio of handheld LDV measurements is about 10dB lower than in the case of measurements from a tripod (due to body and hand vibrations). In Section 4, we demonstrate how to use the combination of pose estimation and handheld vibrometry to obtain 3D scanning measurements. To illustrate the proposed procedure we will use vibration measurements on a bicycle frame in Section 4.

2. 3D pose estimation of a LDV

In this section we describe a method to determine the *pose* of an LDV. This pose consists of the following information :

- The position (x_L, y_L, z_L) of the LDV in the measurement coordinate system.
- The orientation vector $\vec{V_1}$ of the vibrometer in the measurement coordinate system.

When the LDV pose estimation is available, we are also able to determine the coordinates (x, y, z) of the point where the laser beam is incident on the structure. This point is defined in the measurement coordinate system (x_M, y_M, z_M) of our measurement object (see Figure 1).

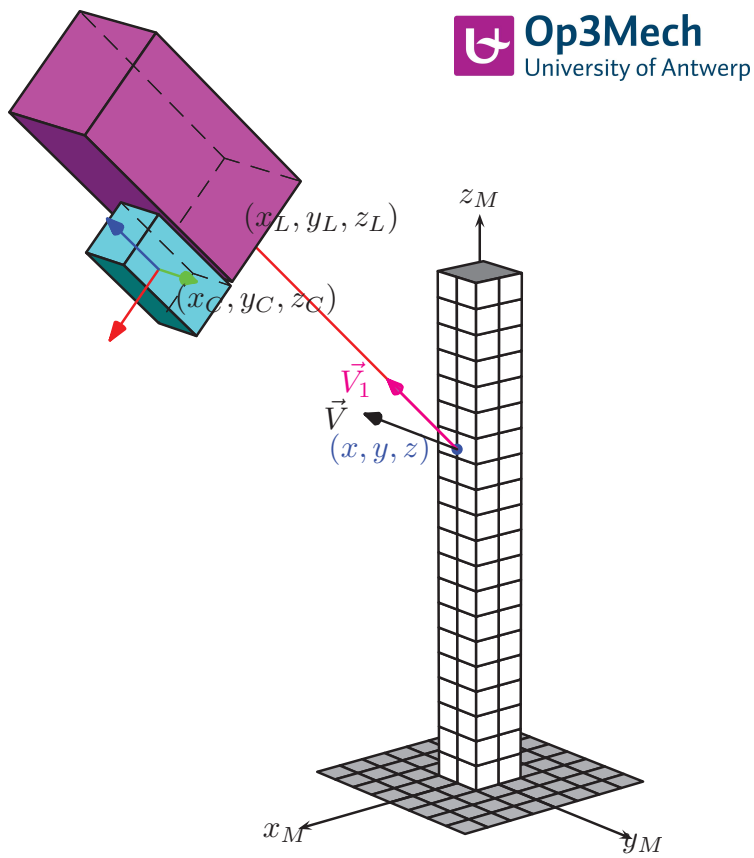

Figure 1: Schematic representation of the position (x_L, y_L, z_L) and the orientation $\vec{V}_1$ of the laser Doppler vibrometer (in magenta) in the measurement coordinate system (x_M, y_M, z_M). The position of the LDV laser spot is given by (x, y, z) and the vibration velocity vector is given by $\vec{V}$. A 2D camera (in cyan) is attached to the LDV at position (x_C, y_C, z_C) and orientation $\vec{V}_C$.

The pose estimation method consists of the following steps :

STEP 1: camera calibration In our method we assume that we have at-

tached a 2D camera to the LDV (see Figure 1). As a first step, we calibrate the camera in order to obtain the intrinsic camera parameters (i.e. focal length, image skewness and image distortion parameters). We use the standard camera calibration procedure using checkerboard patterns as described in [19]. We have used the Matlab camera calibration toolbox implemented by Bouguet [20].

STEP 2: camera-LDV calibration In this step, we determine the relative position and orientation of the camera with respect to the LDV. We use the following procedure to perform the camera-LDV calibration :

1. The checkerboard plate is placed at an arbitrary position in front of the LDV/camera system. In contrast to the previous step the laser is enabled (so it points on checkerboard as can be seen in Figure 2).
2. The 3D position of the checkerboard is determined (using the method described in [19]).
3. The location of the red laser dot in the camera image is determined. This gives us the 3D position of the laser dot in the camera coordinate system.
4. The checkerboard is moved N_p times and for each position the three previous steps are repeated ($N_p \leq 2$ in order to determine both the origin and direction of the laser ray).
5. By combining all the previous steps the relation between the laser ray with origin (x_L, y_L, z_L) and direction $\vec{V_1}$ and the camera coordinate system (x_C, y_C, z_C) is obtained.

The procedure is described in more detail in [21]. Using the camera calibration app we can obtain the 3D position of any 2D point on the checkerboard plate. We determine the position of the laser dot relative to the camera coordinate system to obtain the 3D position of the laser point.
The previous steps (**STEP 1** and **STEP 2**) have to be done only once, after the camera has been physically attached to the LDV. Afterwards the camera-LDV calibration parameters do not change anymore.

STEP 3: Camera image-CAD model matching In order to determine the LDV pose (or equivalently the camera pose) we will use a CAD model of our test object. If we have the pose of the CAD model relative to the camera, then we can map 3D points on the CAD model to 2D image pixels and vice versa. In our method we use a technique which compares two line models: a line model calculated using an edge detection technique on the RGB camera image and a the CAD wire-frame model (see Figure 3). By using line models we can calculate the correct pose (transformation from one model to the other) in a time efficient and robust way. The method is described in detail in [22] and it is available in the the VisionLib software tool distributed by the Fraunhofer institute in Germany [23]. The result of the CAD matching is shown in Figure 4. The output of the tracking algorithm is the 3D pose of the camera in the coordinate system of the object. The 3D tracking method works at about 30 frames per second (for a camera resolution of 640 by 480 pixels). Wuest et al [24] show that the average pose estimation error is about 13 mm for the camera position and 0.09° for the camera angles on a scene of 5 by 6 meters. In our examples the field-of-view was much lower and the average error on the position was about 3 mm. In contrast to other 3D CAD matching techniques the method is insensitive to changes in environmental conditions (e.g. variation of the illumination).

3. Handheld vibrometer measurements

In the previous section we have described a procedure to estimate the pose of an LDV using a camera image of the object under test (using CAD matching). In this section we will use the pose estimate in order to perform handheld LDV measurements. It should be noted that because of the CAD matching there will be an error on the position estimate. In our example the maximum position error was 3 mm. This means that there could be a distance of 6 mm between the locations in the different LDV directions. For low frequency modes this error

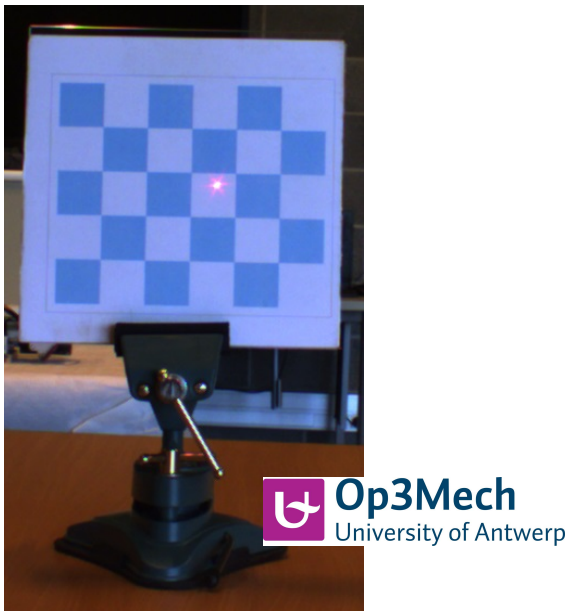

Figure 2: Camera image of the checkerboard pattern with the laser dot. The position of the laser on the checkerboard is used to determine the 3D position of the laser point.

will be negligible, but at higher frequency (i.e. smaller spatial wavelengths of the vibration patterns) the error could be important.

The quality of the handheld LDV measurements will be lower than the measurement quality when using an LDV placed on a tripod. This will be caused by body and arm vibrations that might result in the following three effects :

- Because of vibrations of the LDV there will be a relative velocity added to the structural vibration measurements. Halkon et al [25] have proposed a method using two accelerometers attached to the LDV which could be used to reduce the effect of the additional velocity component caused by the movement of the LDV. They report error reductions of about 30dB.

- Because of body and arm vibrations the position of the laser spot will vary (even if we try to keep it fixed at one position). This will lead to modulations of the velocity measurement (both in amplitude and phase). These modulations are especially important for high frequencies.

- Because the laser beam continuously moves over the surface this will also result in an increase in speckle noise (and potentially more speckle dropouts in the LDV signal).

In order to evaluate the difference between the two approaches (handheld and tripod) we have performed a comparison experiment on a bicycle frame. We have selected this type of thin structure to show that the proposed handheld measurement procedure can also be used on non-plate-like thin tubed structure. Because we have an accurate CAD model of the bicycle frame it would be possible to compare the experimental modal parameters with numerical modal parameters. Unfortunately, we did not have access to the thickness distribution or the layup of the composite material (both are varying significantly for different locations on the bike frame). In the experiment we generated a periodic vibration using a Bruël&Kjaer Type 4824 electrodynamical shaker. The excitation signal was a periodic chirp signal between $1Hz$ and $4000Hz$, a time duration of $T = 1sec$ and a sample rate of $f_s = 10e4$ samples per second. The LDV laser beam of a Polytec IVS200 sensor was directed on a piece of retro-reflective tape at the center of the shaker. The LDV was placed at a standoff distance of $3m$ (on a tripod as well as handheld as can be seen in Figure 5). The analog velocity signals were measured using a National Instruments USB-6343 data acquisition board. In order to be able to estimate the signal-to-noise ratio we have used a periodic excitation and we have measured twenty periods of the vibration signal. The energy at the non-excited lines can then be related to the standard deviation of the measurements.

The frequency spectra of the LDV measurements on the shaker are displayed in Figure 6. Because we apply a discrete Fourier transform on twenty periods of the chirp signal vibration response only one out of twenty DFT lines contains energy (line 2, 21, 41, etc.). The remaining frequency lines are due to distortions and measurement noise. In the graph we observe that the spectrum of the handheld LDV (in blue) includes a low-frequency trend (up to about $500Hz$). This is caused by the low frequency movement of the position of the laser spot

(the amplitude of the movement was estimated to $1cm$ from a video recording of the laser dot). The effect of this low-frequency trend could be reduced using appropriate detrending techniques as the ones presented in [26]. At frequencies above 500Hz the signal-to-noise (SNR) of the handheld measurements is about 40dB (compared to 50dB for the measurements performed from a tripod). From the experiment we conclude that the accuracy of the handheld measurements is about 10dB lower than in the case of measurements on a tripod.

4. Experiments

In this section we will illustrate that the proposed pose estimation method in combination with handheld LDV measurements is able to perform 3D measurements on complex objects. In Section 4.1 we will describe the measurement setup. Results of 3D vibration measurements are given in Section 4.2. In Section 4.3 we will demonstrate that our technique can also be used to perform scanning measurements by manually scanning over the surface of the test object.

4.1. Experimental setup

In order to be able to perform the real-time pose estimation of the LDV we have fixed a camera to the LDV as can be seen in Figure 7-left. The camera was a type uEye UI-324cXP-C RGB camera of the company IDS (we used a resolution of $480 * 640$ while the maximum resolution was $1280 * 1024$). The device under test was a carbon fiber reinforced polymer bicycle frame. The frame was supported in free-free conditions using nylon threads. The structure was excited using a periodic chirp with a duration of one second in a frequency range up to 2kHz (with a sample rate of $f_s = 10e4$ samples per second and a total of $N = 10e4$ points). Twenty periods of the vibration velocity signal were acquired.

4.2. 3D LDV measurements

In Section 2 we have explained how the location (x_L, y_L, z_L) and orientation $\vec{V_1}$ of an LDV can be obtained using the proposed pose estimation technique. If

the method is used for three different LDV poses $\vec{V}_i \quad i = 1, \ldots, 3$ with the laser beam aimed at the same point on the structure, it is possible to estimate the 3D velocity vector. In each LDV direction $\vec{V}_i$ we will measure a velocity vector $\vec{v}_i$. It can be shown that the 3D velocity vector $\vec{V} = (v_x, v_y, v_z)$ can be calculated using Cramers' Rule [8]:

$$v_x = \frac{-\Delta_x}{\Delta} \quad v_y = \frac{-\Delta_y}{\Delta} \quad v_z = \frac{-\Delta_z}{\Delta} \tag{1}$$

with

$$\Delta = \begin{vmatrix} a_1 & b_1 & c_1 \\ a_2 & b_2 & c_2 \\ a_3 & b_3 & c_3 \end{vmatrix} \Delta_x = \begin{vmatrix} -d_1^2 & b_1 & c_1 \\ -d_2^2 & b_2 & c_2 \\ -d_3^2 & b_3 & c_3 \end{vmatrix} \Delta_y = \begin{vmatrix} a_1 & -d_1^2 & c_1 \\ a_2 & -d_2^2 & c_2 \\ a_3 & -d_3^2 & c_3 \end{vmatrix} \Delta_z = \begin{vmatrix} a_1 & b_1 & -d_1^2 \\ a_2 & b_2 & -d_2^2 \\ a_3 & b_3 & -d_3^2 \end{vmatrix} \tag{2}$$

with $d_i = \|\vec{v}_i\|$ and $\vec{n}_i = (a_i, b_i, c_i) = \frac{\vec{v}_i}{\|\vec{v}_i\|}$.

In our experiment three consecutive LDV measurements at a location near the excitation position were performed from three different LDV orientations (resulting in three different angles of incidence). The positions in relation to the test object were marked on the floor (see Figure 8). For the handheld scanning measurements we used the LDV pose information to determine the 3D velocity vector. It should be noted that because of the fact that we keep the LDV in our hands there is a position excursion of about 1cm (see 3). For the position and orientation for each of the three measurements we have used the average position and orientation. This will result in errors in the 3D velocity vector (especially at high frequencies at which the wavelength is small). The influence of the position excursion could be reduced in two ways : firstly, measurements at a smaller stand-off distance (compared to the 3m in the experiments) could be performed. Secondly, we can also remove points in the three LDV measurements with a deviation larger than a certain threshold (because we can calculate location of the laser spot on the structure in real-time).

For the measurements on the tripod we used the measured positions of the tripod in relation to the object.

The comparison of the velocity spectra in the three orthogonal measurement

directions are shown in Figure 9. The results of the X and Z velocity spectra are in good agreement (17.4% and 24.4% error respectively), but the Y-direction shows a large deviation (164.1% error on average, with several resonance peaks between 500Hz and 1000Hz which are missing in the handheld LDV measurements). This is mainly due to the presence of speckle dropouts which caused outliers in one of the three LDV measurements with a large angle of incidence (compared to the normal of the surface of the object). The IVS200 is an older instrument with a high sensitivity to speckle noise (and no filters are available). When using more recent LDV instruments the quality of both handheld and tripod measurements would be significantly higher.

4.3. Handheld scanning measurements

In this section we demonstrate how one can use the handheld LDV method in combination with the real-time LDV pose tracking technique in order to perform scanning measurements with a low-cost single point laser vibrometer. In this case the laser beam is aimed at 19 points on the bicycle frame. The locations of these points were automatically determined using the pose estimation technique described in Section 2 (these locations are shown in Figure 10-top). It can be seen from Figure 10-top that there is an uncertainty of about 1cm. This is acceptable for vibration modes at low frequencies, but at higher frequencies this could imply significant changes in vibration amplitude (and phase). At each of these locations a measurement of 20 seconds was performed (20 periods of a 1 second chirp signal with energy up to 2kHz). The measurement at each point was started using a hardware trigger (i.e. a pushbutton).

This resulted in 19 time records which were then processed in the frequency domain to determine the Operations Deflection Shape (ODS) of the first mode. The ODS was loaded together with the geometry of the structure in the visualization program ParaView. The resulting ODS is shown in Figure 10-bottom.

5. Conclusions

Laser vibrometers allow non-contact measurement of vibrations on large complex structures. If full-field 3D measurements are needed one can use a 3D scanning LDV. For non-plate-like structures like a car body or a bicycle frame the 3D scanning LDV should be placed at different positions either by manually moving the instrument or by placing it on mobile platform like a robot. This process is quite complex and it requires expensive equipment. In this article we have presented a technique where the LDV is held in the hands of an operator while he/she is walking around the structure to measure regions of interest. We showed that the effect of body/arm vibrations introduces an increase in noise level of about 10dB. In addition, we have proposed a real-time LDV pose estimation technique using a 2D camera. This allows us to automatically determine the measurement location as well as the angle of incidence of the laser beam (with respect to the object). We illustrated that this information can be used to calculate the 3D velocity vector provided that we measure the velocity from at least three different angles.

The proposed pose estimation technique matches a 2D camera image with the CAD geometry of the measurement object. This means that a CAD file should be available. Also, the pose estimation does not work on axisymmetric objects (like a sphere or a cylinder).

In the article we have performed discrete consecutive scans at 19 positions on a bicycle frame. However, using the pose tracking technique it is also possible to perform continuous scanning (see [27, 28, 29]). In addition, our method is also applicable when the object would move (i.e. for tracking vibrometry [30]). More in particular, it would be possible to combine our approach with the image based tracking method presented by Castellini et al [31] which allows to lock the laser on one particular location on a structure. For each locked laser location our method could then give access to the (varying) angles of incidence.

Acknowledgements

This research was funded by the University of Antwerp IOF SBO project "3D imaging assisted vibration measurements for product testing and quality control". Furthermore, the research leading to these results has received funding from the FWO SB fellowship, grant number 1S 262 16N. The authors gratefully acknowledge prof. Wim Van Paepegem from the department of Materials Science and Engineering of Ghent University for providing the bicycle frame test object and prof. Joris Dirckx of the department of Biomedical Physics of the Univerisity of Antwerp for the use of the laser Doppler vibrometer. Furthermore, we acknowledge the company Visometry Gmbh for providing us with a licence of the VisionLib software.

References

[1] R. R. Carter, G. A. Massey, Portable laser instrument for vibration analysis and transducer calibration, Shock and Vibration Bulletin 37 (1968) 1–6.

[2] N. A. Halliwell, Laser-Doppler measurement of vibrating surfaces: A portable instrument, Journal of Sound and Vibration 62 (2) (1979) 312–315. doi:10.1016/0022-460X(79)90031-2.

[3] C. J. D. Pickering, N. A. Halliwell, T. H. Wilmshurst, The laser vibrometer: A portable instrument, Journal of Sound and Vibration 107 (3) (1986) 471–485. doi:10.1016/S0022-460X(86)80119-5.

[4] M. Martarelli, G. Revel, C. Santolini, Automated Modal Analysis By Scanning Laser Vibrometry: Problems and Uncertainties Associated With the Scanning System Calibration, Mechanical Systems and Signal Processing 15 (3) (2001) 581–601. doi:10.1006/mssp.2000.1336.

[5] S. J. Rothberg, M. S. Allen, P. Castellini, D. Di Maio, J. J. Dirckx, D. J. Ewins, B. J. Halkon, P. Muyshondt, N. Paone, T. Ryan, H. Steger, E. P. Tomasini, S. Vanlanduit, J. F. Vignola, An international review of laser

Doppler vibrometry: Making light work of vibration measurement, Optics and Lasers in Engineering 99 (October 2016) (2017) 11–22. doi:10.1016/j.optlaseng.2016.10.023.

[6] D. Manwill, J. Blotter, R. West, A hybrid method for scanning laser registration using a general linear laser model, Mechanical Systems and Signal Processing 27 (1) (2012) 619–633. doi:10.1016/j.ymssp.2011.08.003.

[7] P. Castellini, M. Martarelli, E. P. Tomasini, Laser Doppler Vibrometry: Development of advanced solutions answering to technology's needs, Mechanical Systems and Signal Processing 20 (6) (2006) 1265–1285. doi:10.1016/j.ymssp.2005.11.015.

[8] S. Marwitz, V. Zabel, Operational modal analysis with a 3d laser vibrometer without external reference, in: J. De Clerck, D. S. Epp (Eds.), Rotating Machinery, Hybrid Test Methods, Vibro-Acoustics & Laser Vibrometry, Volume 8, Springer International Publishing, Cham, 2016, pp. 75–85.

[9] X. Zeng, A. L. Wicks, L. D. Mitchell, Geometrical method for the determination of the position and orientation of a scanning laser Doppler vibrometer, Optics and Lasers in Engineering 25 (4-5) (1996) 247–264. doi:10.1016/0143-8166(95)00074-7.

[10] D. M. Chen, W. D. Zhu, Investigation of three-dimensional vibration measurement by a single scanning laser Doppler vibrometer, Journal of Sound and Vibration 387 (2017) 36–52. doi:10.1016/j.jsv.2016.09.026.

[11] B. Weekes, D. Ewins, Multi-frequency , 3D ODS measurement by continuous scan laser Doppler vibrometry, Mechanical Systems and Signal Processing 58-59 (2015) 325–339. doi:10.1016/j.ymssp.2014.12.022.

[12] S. Sels, B. Ribbens, B. Bogaerts, J. Peeters, S. Vanlanduit, 3D model assisted fully automated scanning laser Doppler vibrometer measurements, Optics and Lasers in Engineering 99. doi:10.1016/j.optlaseng.2016.09.007.

[13] D. Kim, H. Song, H. Khalil, J. Lee, S. Wang, K. Park, 3-D Vibration Measurement Using a Single Laser Scanning Vibrometer by Moving to Three Different Locations, IEEE Transactions on Instrumentation and Measurement 63 (8) (2014) 2028–2033.

[14] D. E. Montgomery, R. L. West, R. A. Burdisso, Acoustic radiation prediction of a compressor housing from three-dimensional experimental spatial dynamics modeling, Applied Acoustics 47 (2) (1996) 165–185. doi:10.1016/0003-682X(95)00043-9.

[15] P. O. Malley, Five-axis scanning laser vibrometry for three-dimensional measurements of non-planar surfaces, Measurement Science and Technology 20 (11). doi:10.1088/0957-0233/20/11/115901.

[16] L. A. Jiang, M. A. Albota, R. W. Haupt, J. G. Chen, R. M. Marino, Laser vibrometry from a moving ground vehicle, Applied Optics 50 (15) (2011) 2263–2273.

[17] D. E. Oliver, M. Schuessler, Automated Robot-Based 3D Vibration Measurement System, Sound and Vibration (April) (2009) 12–15.

[18] M. Chowanietz, A. Bhangaonkar, M. Semken, M. Cockrill, Improving the correlation of structural FEA models by the application of automated high density robotized laser Doppler vibrometry, in: AIP Conference Proceedings, Vol. 1740, AIP Publishing LLC, 2016, p. 070002. doi:10.1063/1.4952679.

[19] A. Geiger, F. Moosmann, O. Car, B. Schuster, Automatic camera and range sensor calibration using a single shot, 2012 IEEE International Conference on Robotics and Automation (2012) 3936–3943doi:10.1109/ICRA.2012.6224570.

[20] Camera calibration toolbox for matlab, http://www.vision.caltech.edu/bouguetj/calib_doc/, accessed: 2018-08-24.

[21] S. Sels, B. Bogaerts, S. Vanlanduit, R. Penne, Extrinsic calibration of a laser galvanometric setup and a range camera, Sensors (Switzerland) 18 (5). doi:10.3390/s18051478.

[22] H. Wuest, D. Stricker, Tracking of industrial objects by using cad models, JVRB - Journal of Virtual Reality and Broadcasting 4(2007) (1). doi:10.20385/1860-2037/4.2007.1.

[23] H. Wuest, T. Engekle, F. Wientapper, F. Schmitt, J. Keil, From CAD to 3D Tracking - Enhancing & Scaling Model-Based Tracking for Industrial Appliances, Adjunct Proceedings of the 2016 IEEE International Symposium on Mixed and Augmented Reality, ISMAR-Adjunct 2016 (2017) 346–347doi:10.1109/ISMAR-Adjunct.2016.0114.

[24] H. Wuest, D. Stricker, Tracking of industrial objects by using CAD models, Journal of Virtual Reality and Broadcasting 4 (1).

[25] B. J. Halkon, S. J. Rothberg, Taking laser Doppler vibrometry off the tripod: correction of measurements affected by instrument vibration, Optics and Lasers in Engineering 91 (November 2016) (2017) 16–23. doi:10.1016/j.optlaseng.2016.11.006.

[26] M. P. Tarvainen, P. O. Ranta-aho, P. A. Karjalainen, An advanced detrending method with application to HRV analysis Mika P. Tarvainen, Perttu O. Ranta-aho, and Pasi A. Karjalainen, IEEE Transactions on Biomedical Engineering 49 (2) (2002) 172—-175. doi:10.1109/10.979357.

[27] A. B. Stanbridge, M. Martarelli, D. J. Ewins, Measuring area vibration mode shapes with a continuous-scan LDV, Measurement 35 (2004) 181–189. doi:10.1016/j.measurement.2003.07.005.

[28] M. Martarelli, D. J. Ewins, Continuous scanning laser Doppler vibrometry and speckle noise occurrence, Mechanical Systems and Signal Processing 20 (2006) 2277–2289. doi:10.1016/j.ymssp.2005.06.003.

[29] D. D. Maio, D. J. Ewins, Continuous Scan , a method for performing modal testing using meaningful measurement parameters ; Part I, Mechanical Systems and Signal Processing 25 (8) (2011) 3027–3042. doi:10.1016/j.ymssp.2011.05.018.

[30] P. Castellini, N. Paone, Development of the tracking laser vibrometer : Performance and uncertainty analysis Development of the tracking laser vibrometer : Performance and uncertainty analysis, Review of Scientific Instruments 4639 (2000). doi:10.1063/1.1319862.

[31] P. Castellini, E. P. Tomasini, Image-based tracking laser Doppler vibrometer, Review of Scientific Instruments 75 (1) (2004) 222–232. doi:10.1063/1.1630859.

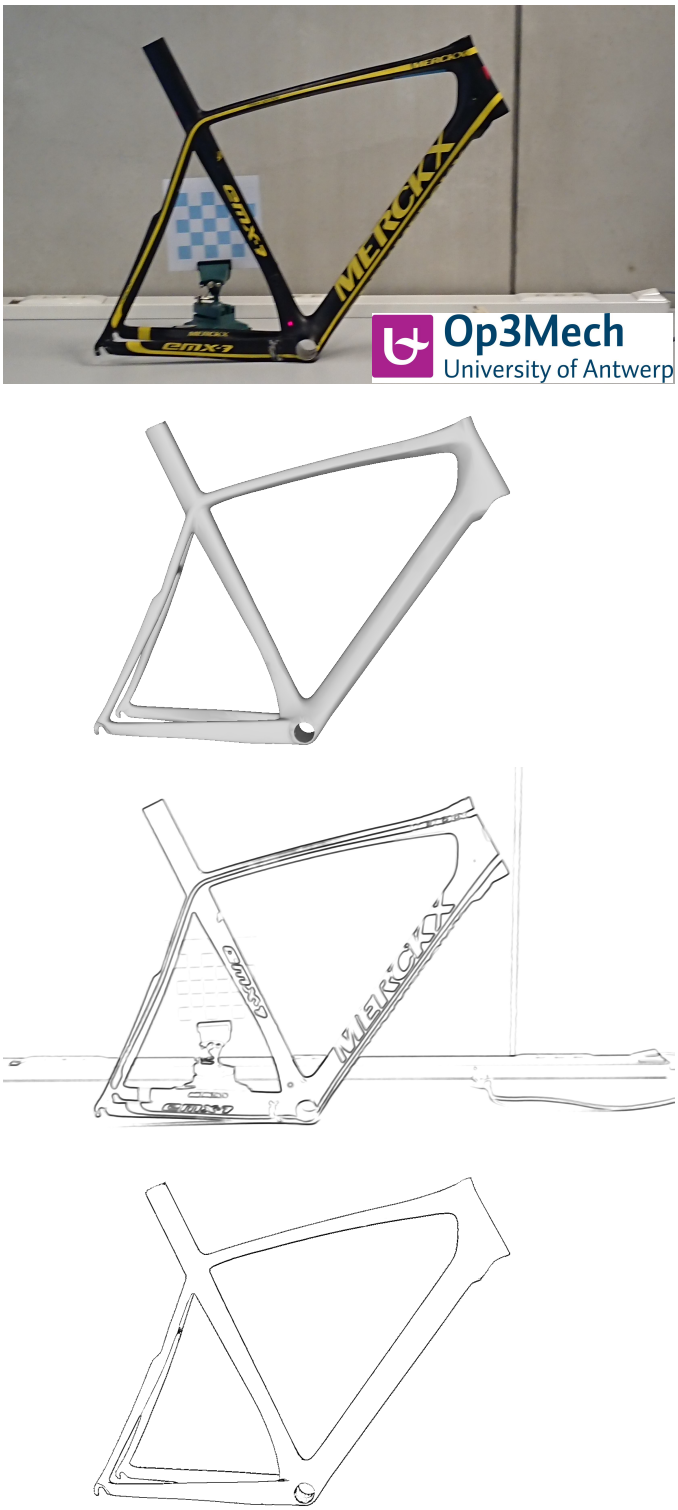

Figure 3: RGB image of the measurement object (top-left) and CAD model of the object (top-right). Bottow: line models obtained from the RGB image (left) and CAD model (right).

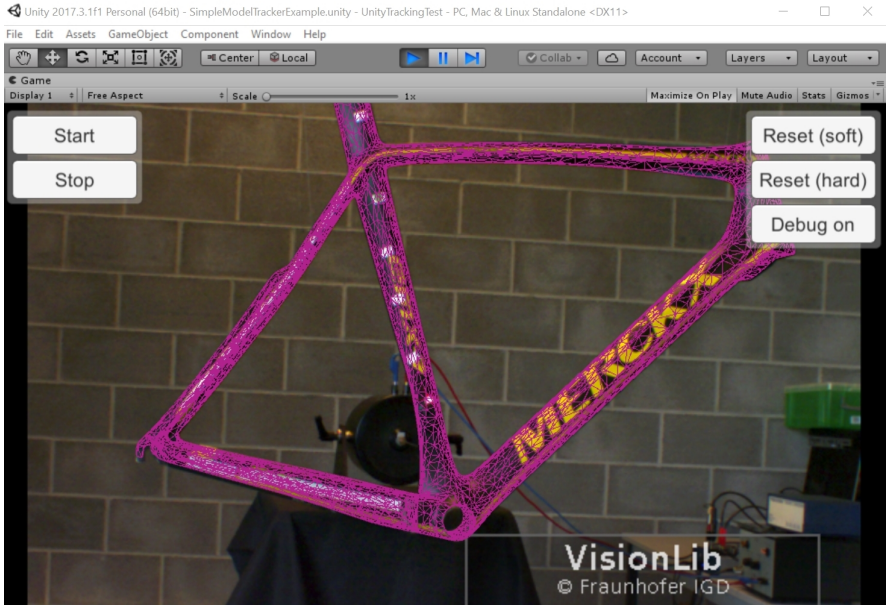

Figure 4: Image framed by the camera attached to the LDV with matched CAD model superimposed on it. The test structure is the bicycle frame that will be used in the vibration measurements in Section 4

Figure 5: Picture of the measurement setup which was used to evaluate the influence of holding the LDV in the hand (versus placing the instrument on a tripod). Left: handheld LDV setup, right: setup of the LDV on a tripod.

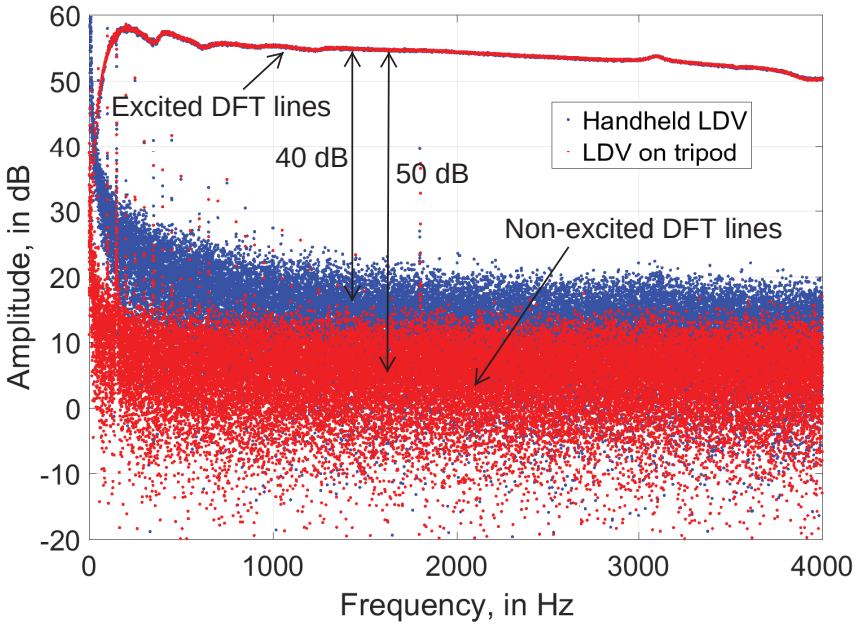

Figure 6: Frequency spectra of the LDV measurements: handheld (blue dots) and on tripod (red dots). Because a DFT of twenty periods was taken it is possible to separate the excited DFT lines (2, 21, 41, etc.) and the non-excited lines (all other lines). The non-excited lines represent the noise level.

Figure 7: Picture of the measurement setup of the 3D and scanning bike frame vibration measurements. Left: IDS uEye camera attached to a Polytec IVS200 LDV. Right: bicycle frame supported in free-free conditions and excited using a shaker.

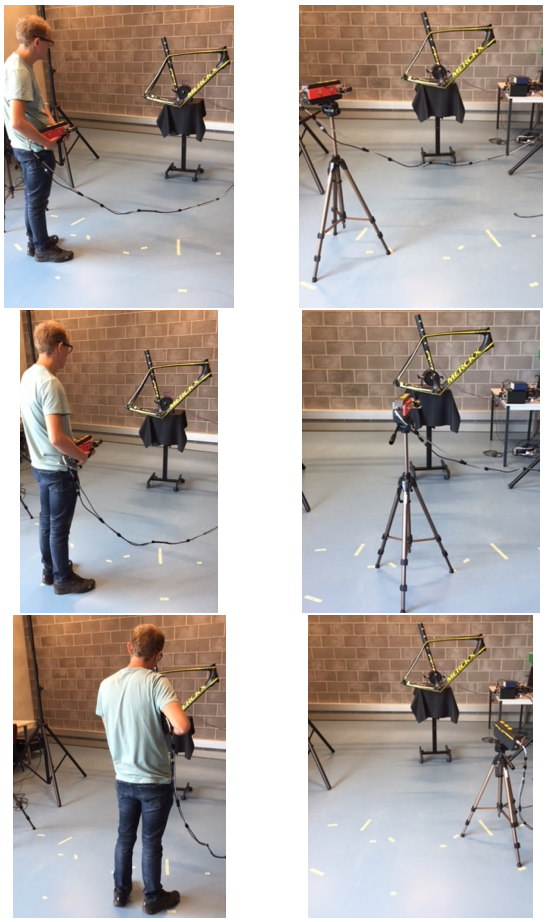

(a) Handheld LDV (b) LDV on tripod

Figure 8: Three LDV positions to determine 3D velocity vector. The positions in relation to the test object are marked on the floor. Left column: handheld LDV technique, right column: LDV on tripod.

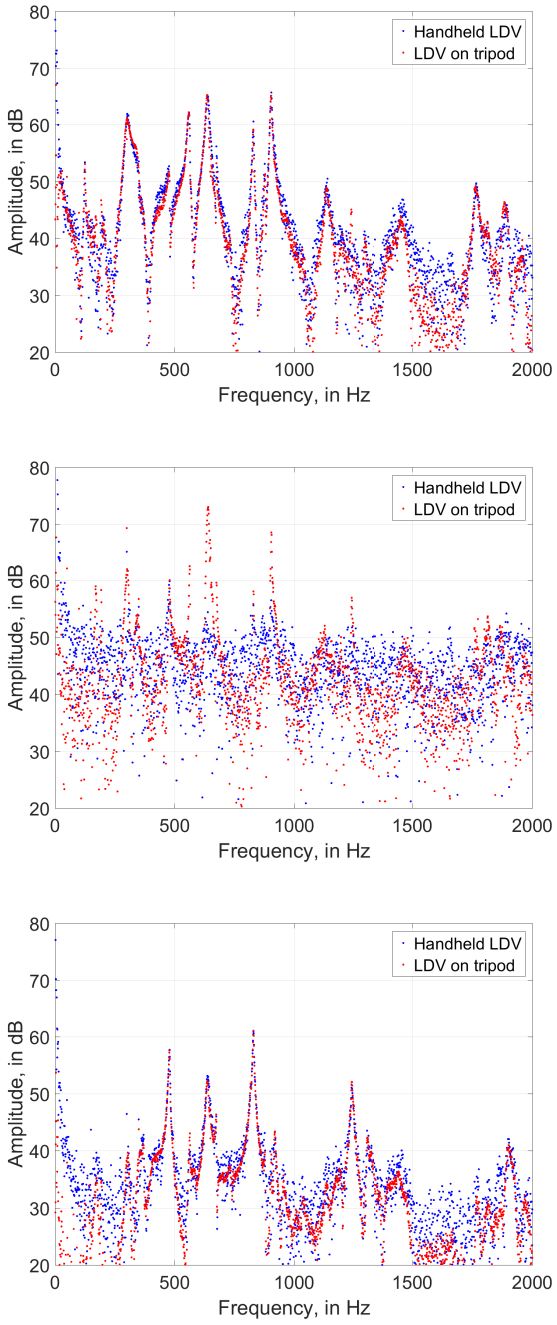

Figure 9: Frequency spectra of the LDV measurements: handheld (blue dots) and on tripod (red dots). Top: X-direction, middle: Y-direction, bottom: Z-direction.

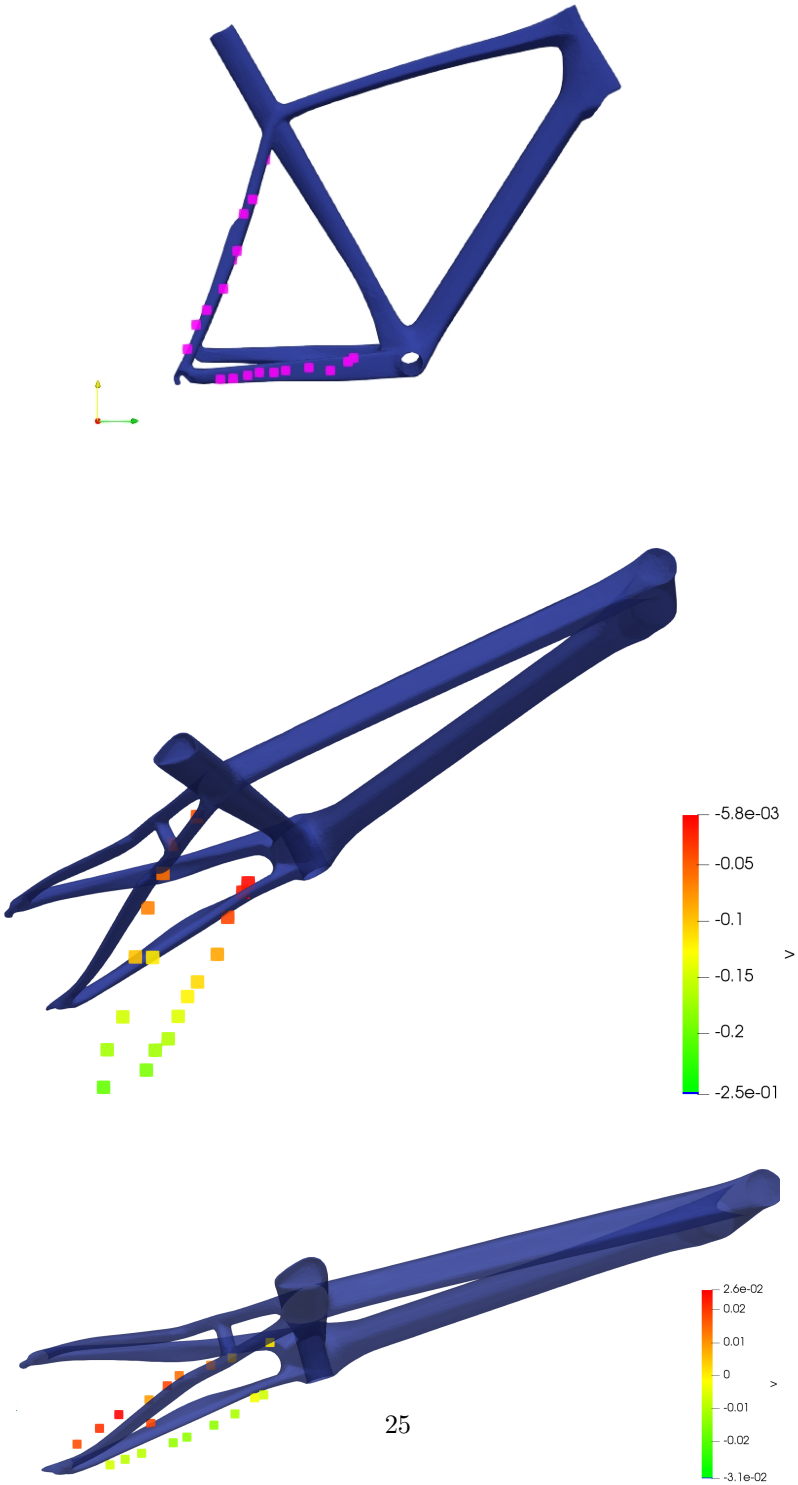

Figure 10: Handheld LDV scanning measurements. Top : locations of the scanning grid points. Middle and bottom : operational defelection shape near the first (middle) and fifth (bottom) resonance frequency of the bike frame. The frequencies of the first and fifth mode are equal to 123.9 Hz and 555.9 Hz respectively.