A family system approach to investigate family-based pathways between financial stress and adolescent problem behavior

Reference:

Ponnet Koen, Van Leeuwen Karla, Wouters Edwin, Mortelmans Dimitri.- A family system approach to investigate family-based pathways between financial stress and adolescent problem behavior
Journal of research on adolescence - ISSN 1050-8392 - 25:4(2015), p. 765-780
Full text (Publishers DOI): http://dx.doi.org/doi:10.1111/jora.12171
To cite this reference: http://hdl.handle.net/10067/1193390151162165141

Title

A family system approach to investigate family-based pathways between financial stress and adolescent problem behavior

Authors

Koen Ponnet, PhD

Karla Van Leeuwen, PhD

Edwin Wouters, PhD

Dimitri Mortelmans, PhD

Abstract

This article proposes a family system approach to improve our understanding on family stress processes. Examining effects within (actor) and between (partner) parents, we explored family-based pathways through which financial stress is associated with adolescent externalizing problem behavior. Data from 340 families were analyzed, with both parents rating their financial stress and parenting stress, and parents as well as adolescents rating the parent-child communication and adolescent problem behavior.

The results revealed that the association between financial stress and adolescent externalizing problem behaviors was mediated by parenting stress and parent-child communication. Although our results provided evidence for both actor and partner effects, actor effects were more prominent. No parent gender differences were found in the strength of the pathways.

Introduction

The past two decades, a large body of research focused on family stress models or processes that examined family-based pathways through which financial stress is associated with negative child and adolescent outcome (Barnett, 2008; Gershoff, Aber, Raver, & Lennon, 2007; Lee, Lee, & August, 2011; Mistry, Lowe, Benner, & Chien, 2008). These studies have consistently shown that through elevated levels of parental stress, financial stress is associated with fewer positive parenting behaviors (Kiernan & Huerta, 2008; Lee, Anderson, Horowitz, & August, 2009), which in turn are associated with child and adolescent outcomes, like externalizing problem behavior (Linver, Brooks-Gunn, & Kohen, 2002). To date, most studies that have applied the family stress model to couples have typically analyzed data on mothers and fathers separately or viewed financial stress as a couple's phenomenon by treating mothers' and fathers' experiences of financial stress as a component of the same latent construct (Falconier & Epstein, 2011). However, financial stress is an individual evaluation of financial circumstances that can exert different influences over both members of a dyad (Conger et al., 1990; Falconier & Epstein, 2011). Conducting further studies which consider the interdependence and mutual influence of mothers and fathers may therefore provide additional insights into the family-based pathways which lead financial stress to affect the adjustment of children and adolescents.

The current study expands upon previous studies on family stress processes, firstly by including data from both parents and secondly by studying the separated pathways through which the financial stress experienced by mothers and fathers might affect the adolescent externalizing problem behavior through the own and the partner's parenting stress and parent-child communication. In order to test our theoretical model, we applied the actor-partner interdependence approach (APIM, Kenny, Kashy, & Cook, 2006), which accounts for mutual influence within dyads by modelling effects on an intrapersonal level (also called actor effects)

and on an interpersonal level (partner effects). Both members of a dyad simultaneously function as actors and partners.

Theoretical foundations

The present study is informed by two theoretical frameworks. Firstly, our study is grounded on the family stress model, a framework describing the mediational role that family processes play in linking economic disadvantage to child and adolescent outcomes (Conger & Conger, 2002; Conger et al., 1992; Conger, Ge, Elder, Lorenz, & Simons, 1994). Family stress models suggest that the perception of financial strain mediates the relationship between income and psychological distress. In other words, more than the objective experience of being poor, the subjective experience of economic disadvantage might lead to psychological distress (Barnett, 2008; Conger & Donnellan, 2007; Mistry, Biesanz, Taylor, Burchinal, & Cox, 2004). Psychological distress is generally operationalized as depressive symptoms (Conger et al., 1994), although marital conflict (Gershoff et al., 2007), parental efficacy (Elder, Eccles, Ardelt, & Lord, 1995; Mistry, Vandewater, Huston, & McLoyd, 2002), global mental health (Linver et al., 2002), general stress (Mistry et al., 2008) and parenting stress (Gershoff et al., 2007; McConnell, Breitkreuz, & Savage, 2011) have also been examined. In its extended form, the model predicts that financial stress and the associated psychological distress cause less optimal or disruptive parenting behaviors, which increase the likelihood of deteriorating adjustment of their offspring, like internalizing and externalizing problems (Conger et al., 1992; Conger et al., 1994).

Secondly, our study is based on the family system approach in which the family is considered to be a complex, integrated whole, in which individual family members are necessarily interdependent (Cox & Paley, 1997; Minuchin, 1974). Several processes have been proposed to explain interrelationships among family members (Erel & Burman, 1995). In this study, we focus on spillover and crossover effects. Spillover occurs when an individual brings experiences or feelings from one domain (e.g., the parent domain) into another domain (e.g.,

the parent-child domain). For example, father's parental stress might be linked to a less open father-child relationship. Crossover refers to the transfer of experiences or affect between people. One example of crossover is when mother's stress is detrimental to the father-child relationship. The Actor-Partner Interdependence Model (APIM) (Kenny et al., 2006) is a specific family system approach that proposes that both the respondent's predictor variables (actor effects) and respondent's partner's predictor variables (partner effects) influence the respondent's outcome variable. In the APIM model, actor effects are indicative of spillover effects, whereas partner effects are indicative of crossover effects.

An actor-partner interdependence approach of the extended family stress model

Despite the wide use of family stress models across a variety of contexts, most studies on the relationship between financial stress and children's problem behaviors focused on either mothers or fathers (Falconier & Epstein, 2011). Because mothers and fathers belong to the same family, however, they should not be viewed simply as two independent individuals. They share a characteristic known as nonindependence (Kenny et al., 2006). Furthermore, the few family stress models that include both partners principally viewed financial stress as a couple's phenomenon by treating mother's and father's experiences of financial stress as a component of the same latent construct (Falconier & Epstein, 2010, 2011). However, by employing data on multiple family members and using an actor–partner interdependence approach, we are able to study the individual way in which the financial stress experienced by mothers and fathers affects the parenting stress and parent-child communication of both the person being studied and his or her partner. To the best of our knowledge, only two studies on the extended family stress model (i.e. studies which included parenting and child outcome as study variable) used an APIM approach to capture financial stress. In a Finnish study by Leinonen and colleagues (2002), this approach was used to investigate pathways from economic pressure to parenting, through different aspects of mental health and marital interactions. Although the authors did not test explicitly for gender differences, their findings suggested that mother's and father's

parenting were impacted in different ways. The study however did not include child behavior as outcome variable (Leinonen, Solantaus, & Punamaki, 2002). Finally, in a study by Parke and colleagues (2004), the impact of parents' financial stress to child adjustment problems was investigated, through depressive symptoms and marital problems. Parke et al. (2004) took a dyadic approach of all used constructs, with the exception of the marital problem construct. Given that mothers' and fathers' scores on the marital problem construct were combined into a single score and used as a mediator between depressive symptoms and parenting, the authors were not able to assess within and between effects on parenting (Parke et al., 2004). The present study addresses this gap by employing data on multiple family members and studying the individual way in which the financial stress experienced by mothers and fathers affects the parenting stress and parent-child communication of both the person being studied and his or her partner. We focus on parent-specific parenting stress, known as parental distress (Abidin, 1992; Theule, Wiener, Rogers, & Marton, 2011), and parent-child communication as mediators of financial stress and adolescent externalizing problem behavior. Below, we briefly review research supporting both constructs as key mediating aspects of the model before outlining our research questions.

Parenting stress and parent-child communication as mediating variables

Parent-specific parenting stress refers to the amount of stress an individual is feeling as a parent due to personal factors as, among others, impaired parenting competence, conflict with the other parent and presence of depression (Abidin, 1992; Deater-Deckard, 1998). In previous studies, financial stress has been linked to parenting stress (Gershoff et al., 2007; McConnell et al., 2011), and parenting stress in turn has been associated with more demanding and less responsive parenting, less involvement with the children and less open parent-child relationships (Crnic & Low, 2002; McConnell et al., 2011; Ponnet, Mortelmans, et al., 2013). Specific to parent-child communication, a construct that is reflective of the parent-child relationship (Luk, Farhat, Iannotti, & Simons-Morton, 2008; Riesch, Anderson, & Krueger,

2006), Ponnet, Wouters and colleagues (2013) and Seginer and colleagues (2002) obtained a negative association between parenting stress and positive parent-adolescent relationships. In general, family relationships seem to be closer when parent-child communication is more open, and research on behavioral problems of children has identified open parent-child communication as a protective factor, but problematic parent-child communication as a risk factor for children and adolescents psychosocial adjustment (Yu et al., 2006).

In considering the role of communication processes within the family, parents and children may perceive the degree of openness in their mutual communication differently (Xiao, Li, & Stanton, 2011). Therefore, the present study uses parent as well as adolescent reports of family communication. Our analyses are based on data from the ongoing Relationships between mothers, fathers, and children (RMFC) project. The data include information on both of the married or cohabiting parents, as well as on a target adolescent between 11 and 17 years of age. Adolescence is a difficult time in the lives of young people both for themselves and their parents. This period is often associated with a rise in problem behaviors, including substance use and other delinquent acts, especially for boys (Ary et al., 1999). It is also a time when parents report being most concerned about their parenting responsibilities and changes in the ways adolescents and parents interact occur (Baril, Crouter, & McHale, 2007). Furthermore, the financial demands of raising and educating older children are often higher than those associated with younger children (Kwon, Rueter, Lee, Koh, & Ok, 2003), which may lead to parenting stress. As such, family stress processes between parents and adolescents is worth examining more closely.

Aims of the study

As shown in Figure 1, we propose a family system approach to improve our understanding on family stress processes. The first aim is to understand how financial stress is related to adolescent externalizing behavior through parenting stress, openness and problems in parent-child communication. We explore for actor effects and partner effects. Based on the findings of

other studies (Gershoff et al., 2007; McConnell et al., 2011), we expect actor effects of financial stress on parenting stress, with more financial stress resulting in more parenting stress. With regard to other actor effects, we expect negative associations between parenting stress and open parent-child communication and positive associations between parenting stress and problems in parent-child communication. With regard to partner effects, we expect that increased levels of financial stress experienced by one parent have positive effects on the partner's parenting stress and that –in turn– parenting stress experienced by one parent is negatively associated with the partner's open parent-child communication and positively with the partners' problems in parent-child communication.

The second aim is to examine parent gender differences in the actor and partner pathways. Some scholars have suggested that the strength of these pathways may differ between mothers and fathers. According to the fathering-vulnerability hypothesis (Cummings, Goeke-Morey, & Raymond, 2004), fathering and father-child relationships might be more vulnerable to stress than is the case with mothering and mother-child relationships. One possible explanation for the increased vulnerability of fathering is that the roles of fathers are less clearly defined by social conventions than the roles of mothers, thus making fathering more sensitive to external influences (Belsky, Youngblade, Rovine, & Volling, 1991; Coiro & Emery, 1998). Still, findings from the few APIM studies conducted to date on the determinants of parenting and parent-child relationships have been inconclusive about parent gender differences. For instance, while Nelson et al. (2009) found a number of gender-specific pathways, APIM studies by Malmberg and Flouri (2011) and Ponnet, Wouters et al. (2013) provided no evidence of gender differences, and therefore no support for the fathering-vulnerability hypothesis. The need for further research was clearly underlined (Ponnet, Wouters, et al., 2013). In order to provide better insight into how mothers and fathers each respond to financial stress, we therefore explicitly tested all pathways for gender differences. Based on the literature (Cummings et al., 2004; Hays, 1996), we expect the strength of the pathways from financial

stress to parenting stress and parent-child relationship to be stronger for fathers than for mothers. With regard to other possible parent gender differences, we make no specific hypotheses because of the general lack of previous literature on this topic.

Thirdly, we formally test evidence of mediation. Given that prior research on family processes provided little evidence of direct effects of financial stress on adolescent externalizing problem behavior (Lee et al., 2011; Mistry et al., 2008), we expect parenting stress and parent-child communication to mediate this relationship.

INSERT FIGURE 1 HERE

Method

This study is part of the ongoing *Relationships between mothers, fathers and children* (RMFC) study on families with adolescents aged between 11 and 17 years old. The RMFC study used a multi-actor approach, focusing on families with different income levels. Given that many economically disadvantaged families are notoriously difficult to access in any systematic way (Faugier & Sargeant, 1997), and given the high rate of nonresponse associated with the collection of multiactor data (Kalmijn & Liefbroer, 2011), the RMFC project employed a nonprobabilistic sampling design. The study was approved by the Ethics Committee of the University of [reference and Belgian registration number removed for masked review].

Procedure

Two-parent families with a target child in secondary school (i.e. between 11 and 17 years old) were recruited in February/March 2012. Families were recruited from five regions of the Dutch-speaking area of Belgium with the aid of undergraduate Bachelor students from two colleges. The students were instructed to recruit low, middle and high income two-parent families. The average age of the students was 35.15 (SD = 1.29) and most were working in the social services. As such, the project took advantage of the social networks of the students in

order to obtain a large set of potential respondents. Only heterosexual non-divorced parents were recruited. Families were sent a letter explaining the purpose of the research and were subsequently contacted and asked to participate. A total of 456 packages of envelopes and questionnaires were distributed, 359 (78.9%) of which were returned in sealed envelopes to the first author by post. The accompanying letter for the participants introduced the study as an investigation of "the relationship between mothers, fathers and children". Target participants were instructed to fill out the booklets individually and not to discuss the content of the questionnaire with one another. Although anonymity and confidentiality were explicitly guaranteed, mothers and fathers were asked to sign a written consent and to return the written consent in a separate envelope by mail. In order to be eligible for this study, both parents were required to fill in the questionnaires. Twelve families were excluded because parents reported that their children had pervasive developmental disorders and lived at home only during the weekend. Seven additional families were excluded because one of the family members had failed to complete the questionnaire adequately.

Description of the sample

The sample to be analyzed consisted of 340 families (1,020 individuals), with 94% (n = 319) married and 6% (n = 21) cohabiting couples. The average age of the fathers was 46.78 (SD = 4.74, range = 29) and the average age of the mothers was 44.68 (SD = 4.12, range = 23). A paired t-test revealed a significant higher mean age of the fathers than of the mothers, $t(339) = -12.12$, $p < .001$. Education was measured as the highest level of education achieved. The educational level of fathers was significantly different from that of mothers: $\chi^2(9) = 140.85$, $p < .001$. Within our sample, 13.7% of the fathers and 8.5% of the mothers had completed less than nine years of education (lower secondary), 29.2% of the fathers and 25.2% of the mothers had completed secondary education, 22.8% of the fathers and 38.3% of the mothers had completed at least three years of higher education, and 34.3% of the fathers and 28% of the mothers had completed more than three years of higher education. 12.1% of the sample was a three-person

household, 41.2% a four-person household, 32.6% a five-person household, 10.3% a six-person household and 3.9% a household of seven or more persons. 97% of the fathers (*n* = 327) and 87% of the mothers (*n* = 295) worked either full-time or part-time. As for country of origin, 7.1% of the mothers and 8.8% of the fathers were born in another country than Belgium. The average net household income per month was 4,170.73€ (*SD* = 1,518.67). Using the modified OECD equivalence scale (Goedemé, 2011), the average household income of our sample (M = 1,655.22€ , *SD* = 649.92) was almost identical to the average household income of the Dutch-speaking part of Belgian households with a child between 11 and 17 years old (*M* = 1,672.88€, *SD* = 749.90, own calculations based on EU-SILC 2010 UDB). Furthermore, 10.32% of the households of our sample had an equivalized income below 1000€ (i.e. the poverty line in Belgium), which is slightly above the 8.86% of households in the representative EU-SILC sample. In the present sample, 10.32% of the households had an equivalized income below 1,000€ (8.87% in the EU-SILC sample), 67.85% between 1,000€ and 2,000€ (58.19% in the EU-SILC sample), 17.70% between 2,000€ and 3,000€, (28.61% in the EU-SILC sample) and 4.13% above 3,000€ (6.03% in the EU-SILC sample), which suggests that in this sample the middle-income families are slightly overrepresented and the higher-income families slightly underrepresented. The average age of the target adolescent was 14.24 years (*SD* = 1.80, range = 6), with 40.1% boys (*n* = 137) and 59.9% girls (*n* = 203). Univariate analysis of variance (ANOVA) revealed no between-group differences for age, $F(1,339) < 1$.

Measures

Household income

Income information was obtained with the question ‘What is the monthly net income of this household (including wages, interests, child support, supplemental income, etc.)?’ Income was a categorical variable, ranging from 1 (less than 249€) to 16 (9,000€ or more), that was transformed into a continuous variable according to the midpoint of the categories (with 9,000€

as the midpoint of the last category). Since mothers' and fathers' ratings did not differ, $t(315) = .200$, *ns*, we used the average of both ratings in our analyses.

Financial stress

The financial stress construct included three measures: financial need, financial insecurity and financial burden. *Financial need* was measured using 3 items (α = .83 for mothers and α = .80 for fathers). Two items were adapted from a study by Blau (1994): "It is difficult to afford much more than the basics with our current income" and "I feel that our current income allows me to maintain a desirable standard of living" (reverse-scored). The third item was "With our current income, it is difficult to make the ends meet". Both mothers and fathers were asked to rate the items along a 7-point Likert scale ranging from 1 (strongly disagree) to 7 (strongly agree). Thus the higher the score, the greater the perceived financial need.. Principal component analyses (PCA) revealed high factor loadings for mothers (ranging from .82 to .88, $R^2 = 74.34$) and fathers (ranging from .82 to .86, $R^2 = 71.18$). Mothers perceived more financial need than fathers, $t(335) = 2.51$, $p < .05$. For *financial insecurity*, mothers (α = .77) and fathers (α = .80) rated the following self-constructed items: "I am worried that I will not be able to pay my bills in the near future", "I think that I will have to scale down my living standards in the following months", "I am often worried about our financial situation, and "I am frightened that I or my partner will lose the job". All of the items were scored along a 7-point Likert scale ranging from 1 (strongly disagree) to 7 (strongly agree). Factor loadings (PCA) ranged from .63 to .88, $R^2 = 60.99$ for mothers and from .74 to .84, $R^2 = 63.43$) for fathers. A paired t-test revealed no differences between mothers and fathers, $t(335) = 1.29$. The *financial burden* items were adapted from the EU-Statistics on Income and Living Conditions (EU-SILC) instrument (Eurostat, 2008). Mothers (α = .85) and fathers (α = .88) rated to what extent five sources of costs are a financial burden or struggle for the household (medical; car/fuel; child related costs like child care, studies or pocket money; house related costs; repayment of mortgages, loans, etc.). The items were scored along a 4-point Likert scale

ranging from 1 (not a burden/struggle) to 4 (a heavy burden/struggle). PCA revealed high factor loadings for mothers (ranging from .69 to .88, R^2 = 64.26) and fathers (ranging from .74 to .88, R^2 = 67.91). No differences between mothers and fathers were found, $t(336) = 1.35$.

Parenting stress

Parenting stress was measured using several items from the Dutch version of the Parenting Stress Index (PSI) (de Brock, Vermulst, Gerris, & Abidin, 1992). The PSI consists of a child domain and a parent domain stress scale. In this study, we focus on the parent domain stress scale, also known as parental distress scale. Both mothers and fathers evaluated the amount of stress they feel as a parent due to the following personal factors: presence of depression (4 items, α = .80 for mothers and α = .84 for fathers) and lack of competence (4 items,α = .73 for mothers and α = .68 for fathers). Sample items of depression are: “When I think about the kind of parent I am, I often feel guilty or bad about myself” and “I feel every time my child does something wrong it is really my fault”. Sample items of competence are: “Being a parent is harder than I thought it would be” and “I have had many more problems raising children than I expected”. The items were rated on a 6-point Likert scale ranging from 1 (strongly disagree) to 6 (strongly agree), with higher scores indicating more parenting stress. Factor loadings (PCA) on the subscale lack of competence ranged from .70 to .85 (R^2 = 62.66) for mothers and from .78 to .88 (R^2 = 68.69) for fathers. A paired *t*-test revealed no differences between mothers and fathers $t(334) = -.78$. No differences were found between parents on the subscale depression, $t(334) = 1.29$, with factor loadings ranging from .58 to .85 (R^2 = 57.16) for mothers and from .65 to .82 (R^2 = 52.91) for fathers.

Parent-child communication

Parents and adolescent completed an abbreviated Dutch version of the Parent–Adolescent Communication Scale (PACS, Barnes & Olson, 1985). The PACS has a parent version and a youth version which differ only in that the person targeted by the question is either ‘‘my parents’’ (youth version) or ‘‘my child’’ (parent version). Adolescents completed the PACS

two times, once for the mother-child and once for the father-child communication. The scale measures two aspects of communication: openness and problems, which can be used individually or summed to result in a total score (Daley, 2006). Given that an absence of problems in communication does not necessarily imply openness in communication, we used the individual subscales. The Open Family Communication (OFC, 4 items) subscale reflects feelings of free expression and understanding in parent-adolescent interactions (e.g., ‘‘I find it easy to discuss my problems with my mother/father/child). The Problems in Family Communication (PFC, 4 items) subscale measures negative interaction patterns and hesitancy to disclose concerns (e.g., ‘‘My mother/father/child has a tendency to say things to me that would be better left unsaid’’). All items were rated on a 7-point Likert scale from ‘‘strongly disagree’’ to ‘‘strongly agree’’. Higher scores on the OFC indicate more effective family communication, whereas higher scores on the PFC indicate more problematic family communication.

With regard to open family communication, PCA indicated high factor loadings for mothers (ranging from .79 to .84, R^2 = 67.13) and fathers (ranging from .79 to .88, R^2 = 68.13). No differences were found between mothers’ (α = .83) and fathers’ (α = .84) scores, $t(325) = -.64$. PCA indicated high factor loadings on the child-reported mother-child (ranging from .80 to .87, R^2 = 69.19) and father-child (ranging from .80 to .91, R^2 = 73.11) open communication. No differences were found between mother-child (α = .85) and father-child communication (α = .88) as rated by the adolescents, $t(321) = -.57$. With regard to problems in family communication, factor loadings (PCA) for mothers ranged from .68 to .84, (R^2 = 57.49) and for fathers from .66 to .86, (R^2 = 59.27). No differences were found between mothers’(α = .75) and fathers’ (α = .76) scores, $t(333) = -.19$. Similarly, no differences were found between mother-child (α = .73) and father-child communication (α = .79) as rated by the adolescents, $t(329) = -.09$. Factor loadings (PCA) ranged from .56 to .86 (R^2 = 56.10) for mother-child PFC, and from .71 to .86 (R^2 = 61.76) for father-child PFC.

Externalizing adolescent behavior

Mothers, fathers and adolescents independently rated the child's externalizing problem behavior, using the Child Behavior Checklist Parent-Report and Youth Self-Report (CBCL, Achenbach, 1991). The CBCL is a well-standardized symptom checklist that consists of a series of statements that might describe the youth during the previous 6 months. The response format is not true (0), somewhat or sometimes true (1), and very true or often true (2). For parents and children, we used the externalizing items focusing on aggressive and delinquent behaviors. Examples of items are "I lie or cheat (youth report)/My child lies or cheats (parent report)" and "I disobey at school (youth report)/ My child disobeys at school (parent report)". Items were summed and divided by the number of items. Cronbach alpha's were .87, .87, .81 for mothers, fathers and children respectively. Adolescents reported more externalizing behavior (M = .28, SD = .18) than mothers (M = .18, SD = .16), paired-$t(336) = 9.42$, $p < .001$, and fathers (M = .18, SD = .16), paired-$t(334) = 9.31$, $p < .001$.

Control variables

Covariates of interest were adolescent's gender and age, mother's and father's education and age. Furthermore, mothers were asked on a 5-point Likert scale "In the household, who pays the bills or does the financial administration?", with answers ranging from "0 = always I" to "5 = always my partner". We called this item "financial responsibility".

Results

Analytic strategy

Our analyses begin with a discussion of the intercorrelations among the key study variables. We then conducted structural equation modeling (SEM) using Mplus (Muthén & Muthén, 2010) with maximum likelihood estimation to examine the relationships among household income, financial stress, parenting stress, family communication and externalizing adolescent behavior. Two separated models were conducted: one with open family communication and

one with problems in family communication as mediating variable. Missing values on the variables were excluded from the analyses using listwise deletion. The final sample consists of 326 families.

The analyses were carried out in the following way. Firstly, we built the two measurement models and investigated the fit. Given that the adolescents had to rate twice the same parenting behavior of each parent, correlated error terms were allowed across both constructs in order to partial out response bias (see also Lavee, McCubbin, & Olson, 1987; Leinonen et al., 2002). Then we examined the relationship between the demographic covariates and our study variables. Thirdly, we conducted structural equation models with parenting stress and parent-child communication as mediators between financial stress and adolescent problem behavior and explored for actor and partner pathways between the study variables. To test whether the actor or partner effects differed significantly between fathers and mothers, we generated nested models by constraining pathways to be equal and comparing these models to the baseline (unconstrained) models. Because constraining one path to be equal to another path yields a gain of one degree of freedom, a statistically significant change in the chi-square value as compared with the model without equality constraints indicates that actor or partner effects are statistically different from each other and stronger for one parent (Ponnet, Mortelmans, et al., 2013). A nonsignificant change in the chi-square value as compared with the model with no equality constraints indicates no differences between the two parents. Finally, we formally tested evidence of mediation, with parenting stress and family communication as mediators.

Bivariate correlations

The correlations among the study variables are listed in Table 1. As expected, correlations were found between household income and mothers' and fathers' financial stress. No correlations were found between household income and the other variables. Financial stress was correlated with parenting stress on the actor level, but not on the partner level (with two exceptions). Furthermore, no actor and partner correlations were found between financial stress and open

family communication (with one exception). Similarly, almost no correlations were found between financial stress and problems in family communication. With regard to the association between financial stress and externalizing behavior, 9 out of the 18 correlations were significant. Significant correlations were however found between parenting stress, open and problematic family communication and adolescent problem behavior.

INSERT TABLE 1 HERE

Measurement models

We built two measurement models for financial stress, parenting stress, family communication and externalizing adolescent behavior, whereby the first model included open family communication and the second model included problems in family communication. For each parent, the factor scores of financial need, financial insecurity and financial burden were used to create a latent construct, called financial stress (see Figure 2 and 3). The factor scores of lack of competence and depression were used to create a latent construct, called parenting stress. The latent constructs open mother-child and father-child communication were constructed with the OFC factor scores of parents and adolescents (see Figure 2), whereas the latent constructs problems in mother-child and father-child communication were constructed with the PFC factor scores of parents and children (see Figure 3). The construct externalizing behavior of the adolescent was created with the standardized scores of mothers, fathers and the child on the CBCL.

The first measurement model (with open family communication) provided a good fit, $\chi^2(97) = 214.15$, $p < .001$; $\chi^2/df = 2.21$, CFI = .95, RMSEA = .06 (CI: .05 - .07), SRMR = .04. All factor loadings were above .42. Interdependencies were found between mother's and father's financial stress ($r = .74$, $p < .001$), parenting stress ($r = .42$, $p < .001$) and open mother-child and father-child communication ($r = .45$, $p < .001$). The fit of the second measurement model (with problems in family communication) was adequate, $\chi^2(98) = 257.13$, $p < .001$; $\chi^2/df = 2.62$, CFI = .93, RMSEA = .07, SRMR = .04. All factor loadings were above .42. The latent

constructs problems in mother-child and father-child communication were interdependent (r = .42, $p < .001$).

Because the objectives of our research require the inclusion of separated scores for mothers' and fathers' latent constructs, we conducted for each construct a test to specify whether such a distinction was warranted. Therefore we compared models in which maternal and paternal constructs are modeled separately to produce a model in which both constructs are combined into a single latent construct. The χ^2 difference tests indicated that combining the parent-reported constructs decreased the fit significantly, with $\chi^2(1) = 81.52$, $p < .001$ for financial stress, $\chi^2(1) = 147.69$, $p < .001$ for parenting stress, $\chi^2(1) = 25.36$, $p < .001$ for open parent-child communication, $\chi^2(1) = 18.79$, $p < .001$ for problems in parent-child communication. As such, all latent constructs were modeled separately in our analyses.

Then, we included the socio-demographic variables as covariates in the analyses and examined the relationships between adolescent's age, adolescent's gender, mother's and father's education, mother's and father's age, financial responsibility and all latent variables. Among all the variables considered, adolescent's age was significantly associated with open father-child communication ($\beta = -.27$, $S.E = .07$, $p < .001$) and adolescent's gender was significantly associated with open mother-child communication ($\beta = .24$, $S.E = .09$, $p < .01$), with girls reporting that the communication is more open than boys. Furthermore, father's education was significantly associated with his financial stress ($\beta = -.30$, $S.E = .05$, $p < .001$). In addition, we found that financial responsibility was associated with mother's financial stress ($\beta = -.14$, $S.E = .06$, $p < .05$). The structural models below are adjusted for the effect of these covariates.

Structural model: Financial stress relating to externalizing problem behavior via parenting stress and open family communication

Figure 2 presents the results of the structural model. The results of the fit statistics indicated a good model fit, with $\chi^2(203) = 390.17$, $p < .001$, $\chi^2/df = 1.92$, CFI = .92, RMSEA = .05 (CI: .05

- .06), SRMR = .06. Contrary to our expectations, no partner effects were found between financial stress and parenting stress, and between p parenting stress and open parent-child communication. Our tested model was however consistent with the family stress model, in that -within each parent- parenting stress and open parent-child communication were found to be mediators. First, parenting stress was found to mediate the relationship between financial stress and open parent-child communication. Specifically, financial stress was positively related to parenting stress, which in turn was negatively associated with open parent-child communication, and positively associated with adolescent externalizing problem behavior (see Figure 2). Second, open parent-child communication was found to mediate the relationship between parenting stress and adolescent problem behavior. Specifically, parenting stress was negatively related to open parent-child communication and open parent-child communication in turn was negatively associated with adolescent problem behavior.

Next, we tested for parent gender differences by constraining each pathway to be equal. One by one comparison of the constrained model with the baseline model revealed no parent gender differences in the association between financial stress and parenting stress ($\chi^2(1) = 3.91$, *ns*), between parenting stress and open parent-child communication ($\chi^2(1) = 0.04$, *ns*), between open parent-child communication and adolescent externalizing problem behavior ($\chi^2(1) = 0.04$, *ns*), and between parenting stress and problem behavior of the adolescent ($\chi^2(1) = 0.85$, *ns*).

To formally test evidence of mediation, we used the INDIRECT command in Mplus to estimate the value and significance of the product of the indirect pathways by which financial stress influence children's behavior. Net the influence of covariates and other modeled pathways, the indirect effect of financial stress on adolescent's behavior was significant (total indirect $\beta = .13$, $p < .001$). As such, the results provide evidence that financial stress influences adolescent externalizing problem behaviors throughout the family system. As shown in Table 2, our findings suggest that -although significant- only a small part of the influence of financial stress on adolescent's outcome takes place through open parent-child communication (23% or

.027/.117). A model without open parent-child communication as mediating variable revealed that the association between parenting stress and children's outcome was β = .36 ($p < .001$), suggesting that open parent-child communication partially mediated the relationship between parenting stress and adolescent's outcome.

INSERT FIGURE 2 AND TABLE 2 HERE

Structural model: Financial stress relating to externalizing problem behavior via parenting stress and problems in family communication

Figure 3 shows the structural model. The model had a good fit, with $\chi^2(203) = 405.79$, $p < .001$, $\chi^2/df = 2.00$, CFI = .91, RMSEA = .06 (CI: .05 - .06), SRMR = .06. Our model was consistent with the family stress model, in that parenting stress and problems in parent-child communication were found to be mediators. Furthermore, partner effects were found between parenting stress and problems in parent-child communication. Parenting stress was found to mediate the relationship between financial stress and problems in parent-child communication. Specifically, financial stress was positively associated with parenting stress, which in turn was positively related to own and partner's problems in family communication (see Figure 3). Second, problems in parent-child communication were found to mediate the relationship between parenting stress and adolescent externalizing problem behavior. Specifically, own and partner's parenting stress was positively related to problems in parent-child communication, and problems in parent-child communication were positively associated with adolescent externalizing problem behavior.

Comparing one by one the constrained model with the baseline model revealed no parent gender differences in the association between financial stress and parenting stress ($\chi^2(1) = 3.38$, *ns*), between parenting stress and partner's own problems in parent-child communication ($\chi^2(1) = 0.71$, *ns*), between parenting stress and the other partner's problems in parent-child communication ($\chi^2(1) = 0.01$, *ns*), and between problems in parent-child communication and externalizing problem behavior of the adolescent ($\chi^2(1) = 0.07$, *ns*).

With respect to evidences of mediation, net the influence of covariates and other modeled pathways, the indirect effect of financial stress on adolescent's behavior was significant (total indirect $\beta = .12$, $p < .001$), confirming that financial stress has repercussions throughout the family system, including adolescent's problem behaviors. As shown in Table 2, our estimates indicate that around 83 per cent of the total indirect effect of financial stress on adolescent's problem behaviors (.09/.12) is explained by the mediating role of the own parenting stress and the own problems in family communication. This suggests that the influence of own financial stress on adolescent's outcome takes mainly place through the own problems in parent-child communication and not through the partner's problems in parent-child communication.

INSERT FIGURE 3 HERE

Discussion

Results from earlier studies have indicated that through elevated levels of parenting stress, financial stress is associated with fewer positive parenting behaviors and more problems in child and adolescent behavior (McConnell et al., 2011). Few studies on family stress processes used an APIM framework to examine the mutual influence of fathers and mothers. The present study contributes to the field of family stress processes by using a family system approach. The aims of the current study were threefold. First, we explored for pathways within and between family members. Second, we examined whether the strength of the pathways differed between mothers and fathers. Third, we formally tested evidence of mediation.

With respect to the first aim, the findings are consistent with prior research on family stress processes (Gershoff et al., 2007; Mistry et al., 2008), in that the association between financial stress and adolescent externalizing problem behavior was mediated by parenting stress and parent-child communication. Our results suggest that financial stress has detrimental effects on parenting stress and that parenting stress in turn is associated with less open parent-child communication and more problems in parent-child communication. Open as well as problematic parent-child communication are associated with adolescent externalizing problem

behavior. By focusing on effects within and between family members, we estimated whether something relational occurred as well (Kenny et al., 2006), because a parent's family communication depends on feelings of stress of his or her partner, besides his or her own feelings of stress. Whereas our results provide evidence for both actor and partner effects, actor effects seem to be more prominent than partner effects. In fact, partner effects were only found between parenting stress and problems in parent-child communication, suggesting that more parenting stress results in more problems in the partner's parent-child communication. This finding is consistent with the family system approach that highlights the idea that the family is a complex, integrated whole whereby problems in the family system, like parental stress, tend to have negative effects on other family members and the relationship between other family members (Cox & Paley, 1997).

With respect to the second aim, we investigated whether the strength of the pathways differed between mothers and fathers. According to the fathering-vulnerability hypothesis, father-child relationships might be more impacted upon by stress and environmental characteristics than mother-child relationships (Belsky et al., 1991; Cummings et al., 2004). Nonetheless, most studies that endorse the fathering-vulnerability hypothesis used the individual as unit of analysis thus ignoring non-independence in dyad members' scores on standard significant testing, which might result in biased variances (Kenny et al., 2006). The scant studies on parent-child relationships using an APIM approach provided less evidence for parent gender differences (Malmberg & Flouri, 2011; Nelson et al., 2009; Ponnet, Mortelmans, et al., 2013). In line with prior APIM studies, we found no parent gender differences. To date, most recent studies on the relationship between financial stress and children's problem behaviors focused on single-mother households (Barnett, 2008). Although residing in a single-mother family might be a risk factor for economic disadvantage, some low-income families are able to make ends meets, whereas some families with high incomes (and high expenses) experience financial stress (Gershoff et al., 2007). Furthermore, living in richer area lowers

perceived economic welfare (Ravallion & Lokshin, 2002). Inclusion in this study of both parents suggests that the strengths of the pathways are equal for mothers and fathers and -as such-underlines the importance of including both parents in future research on family stress processes.

With respect to the third aim, no direct effects of financial stress on adolescent externalizing problem behavior were found after accounting for the covariates and the mediating processes. Consistent with other family stress studies (e.g., Lee et al., 2011; Mistry et al., 2008), the results provide clear evidence that financial stress influences adolescent externalizing problem behavior throughout the family system, i.e. through elevated levels of parenting stress and parent-child communication. Whereas problems in parent-child communication fully mediated the link between parenting stress and adolescent externalizing problem behavior, open parent-child communication partially mediated this relationship. Although these findings are consistent with other studies on the parent-child communication (Xiao et al., 2011), it might be interesting to explore in future studies other protective factors as well, like open communication with peers, or social and sibling support. The dyadic approach further enabled us to investigate both indirect actor and partner effects. Our findings suggest that the influence of own financial stress on adolescent's outcome took mainly place through the own problems in parent-child communication, but is important not to overlook that also the partner's problems in parent-child communication mediated the relationship between parental financial stress and adolescent outcome. This underscores the importance to include multiple family members in studies on family stress processes and studying intra- and interpersonal pathways.

Strengths and limitations

This study contributes to the current body of research by exploring family stress pathways within and between family members and using rigorous methods to examine these family stress processes. Among other features, a major advantage of this research involves the use of parent reports of financial stress and parenting stress, combined with parent and adolescent reports of

family communication and externalizing problem behavior, thus avoiding the problem of common-method variance. In order to establish the robustness of our proposed model, we rigorously established the fits of the measurement and structural models. Furthermore, the framework of the actor-partner interdependence model enabled us to explore for actor and partner pathways and to test for parent gender differences. Nonetheless, it is important to note some limitations that attenuate the clarity of the current results.

One major limitation of this study stems from the cross-sectional nature of the data: causal relationships can only be theoretically inferred. We assume that parenting stress influences the parent-child communication, but we acknowledge that reciprocal causation or bi-directionality between parenting stress and family communication cannot be ruled out. From a theoretical point of view and on the basis of results from the few available longitudinal studies, we can however assume that parenting stress has an influence on parent-child relationships (Crnic & Low, 2002; Lovejoy et al., 2000) and that financial stress has an influence on adolescent's outcome through parenting stress and parent-child relationships (Gershoff et al., 2007; Kiernan & Huerta, 2008; Linver et al., 2002; Mistry et al., 2008). Furthermore, using the Akaike information criterion (AIC), which indicates model fit relative to parsimony (Bozdogan, 2000), we compared our proposed models (figures 2 and 3) to models in which the pathways between parenting stress and parent-child communication operated in the opposite direction. A lower AIC indicates a better fit (Kline, 2005), and an AIC difference larger than 10 indicates a lack of support for the model with the larger AIC value (Burnham & Anderson, 2002). With regard to the association between parenting stress and open parent-child communication (figure 2), the alternative model (i.e. in which the direction of effects was reversed) had a higher AIC than the proposed model, with an AIC difference of 9.05. With regard to the association between parenting stress and closed parent-child communication (figure 3), the alternative model had a considerable higher AIC than the proposed model, with an AIC difference of 38.02. Although these results lend support to the notion that parenting stress has an impact on parent-child

communication and not vice versa, corroboration of our findings produced by additional longitudinal data would lend credibility to the findings. A second limitation is that the sample size and the use of latent constructs did not enable us to examine for moderation effects of the adolescent's gender. Although Barnes and Olson (1985) found no gender differences in the perception of boys' and girls' communication with their mothers and fathers, there is also evidence of differences between girls and boys in the type of information they communicate to parents as well as selectivity with regard to the parent to whom they communicate (Jackson, Bijstra, Oostra, & Bosma, 1998). Therefore, we call for future studies of the influence of the gender of the adolescents, using multiple-groups SEM with larger sample sizes. Third, although we used parent and child reports of family communication and problem behavior, thereby avoiding the problem of common-method variance, we acknowledge that the reliance on self-reports is a limitation. Self-reports represent the impressions of the informant and are subject to response distortions that might inflate the associations between independent and outcome variables (Podsakoff, MacKenzie, & Podsakoff, 2012). A more appropriate way to measure the dependent and independent variables would be through observation or reports of independent evaluators (Lorenz, Conger, Simon, & Whitbeck, 1991). Another limitation is sampling bias, which may limit the generalizability of the study findings. Only non-divorced families with at least one child in secondary school (i.e. between 11 and 17 years old) were recruited, thereby excluding single or remarried parents. Although the sample was in many respects heterogeneous, parents with low educational attainment and parents with higher household incomes were underrepresented. This underrepresentation might be a result of the recruitment procedure. Another possible explanation is that these parent groups are less likely to participate in survey research and might therefore be excluded a priori. Alternative participant recruitment and data collection strategies may be needed to minimize sampling bias in future studies.

Conclusion

The present study expands previous studies on family stress processes by using a family system approach. We found that financial stress was associated to adolescent externalizing problem behavior through elevated levels of parenting stress and parent-child communication. Although actor and partner effects were found, actor effects were more prominent. Furthermore, no gender differences were found in the family-based pathways. No direct effects of financial stress on adolescent externalizing problem behavior were found after accounting for the covariates and the mediating processes. Whereas problems in parent-child communication fully mediated the link between parenting stress and adolescent's problem behavior, open parent-child communication partially mediated this relationship. Our results highlight the importance to include multiple family members in studies on family stress processes in order to enhance our knowledge on their mutual influence.

Acknowledgements

This study was funded with support from the FWO Methusalem Research Fund (41/FA040100/FFB2998) and the Research Fund (BOF) of University of Antwerp (41/FA040300/5/5628). Additional funding for the study was provided by the Higher Institute for Family Sciences. Special thanks go to Bea Cantillon and Tanja Nuelant for their encouragements and support.

Author addresses and affiliations

Koen Ponnet, PhD, corresponding author, Research Centre for Longitudinal and Life Course Studies (CELLO), University of Antwerp, Sint-Jacobstraat 2, 2000 Antwerp, Belgium, telephone: 0032 484 147972, Koen.Ponnet@uantwerpen.be; Higher Institute for Family Sciences, Huart Hamoirlaan 136, 1030 Brussels, Belgium;

Karla Van Leeuwen, PhD, Parenting and Special Education Research Group, Katholieke Universiteit Leuven, Andreas Vesalius Street 2, 3000 Leuven, Belgium, Karla.VanLeeuwen@KuLeuven.be;

Edwin Wouters, PhD, Research Centre for Longitudinal and Life Course Studies (CELLO), University of Antwerp, Sint-Jacobstraat 2, 2000 Antwerp, Belgium, Edwin.Wouters@uantwerpen.be;

Dimitri Mortelmans, PhD, Research Centre for Longitudinal and Life Course Studies (CELLO), University of Antwerp, Sint-Jacobstraat 2, 2000 Antwerp, Belgium, Dimitri.Mortelmans@uantwerpen.be

References

Abidin, R. (1992). The determinants of parenting behavior. [Editorial Material]. *Journal of Clinical Child Psychology, 21*(4), 407-412.

Achenbach, T. (1991). Manual for the Child Behavior Checklist. Burlington, VT: University of Vermont: Department of Psychiatry.

Ary, D., Duncan, T., Biglan, A., Metzler, C., Noell, J., & Smolkowski, K. (1999). Development of adolescent problem behavior. [Article]. *Journal of Abnormal Child Psychology, 27*(2), 141-150. doi: 10.1023/a:1021963531607

Baril, M., Crouter, A., & McHale, S. (2007). Processes linking adolescent well-being, marital love, and coparenting. *Journal of Family Psychology, 21*(4), 645-654. doi: 10.1037/0893-3200.21.4.645

Barnes, H., & Olson, D. (1985). Parent-adolescent communication and the circumplex model. *Child Development, 56*(2), 438-447.

Barnett, M. (2008). Economic disadvantage in complex family systems: Expansion of family stress models. *Clinical Child and Family Psychology Review, 11*(3), 145-161.

Belsky, J., Youngblade, L., Rovine, M., & Volling, B. (1991). Patterns of marital change and parent-child interaction. *Journal of Marriage and the Family, 53*(2), 487-498.

Blau, G. (1994). Testing a 2-dimensional measure of job search behavior. *Organizational Behavior and Human Decision Processes, 59*(2), 288-312.

Bozdogan, H. (2000). Akaike's information criterion and recent developments in informational complexity. *Journal of Mathematical Psychology, 44*(62-91).

Burnham, K., & Anderson, D. (2002). *Model selection and multimodel inference: a practical information-theoretic approach (2nd Edition)*. New York: Springer-Verlag.

Coiro, M., & Emery, R. (1998). Do marriage problems affect fathering more than mothering? A quantitative and qualitative review. *Clinical Child and Family Psychology Review, 1*(1), 23-40.

Conger, R., & Conger, K. (2002). Resilience in Midwestern families: Selected findings from the first decade of a prospective, longitudinal study. *Journal of Marriage and Family, 64*(2), 361-373.

Conger, R., Conger, K., Elder, G., Lorenz, F., Simons, R., & Whitbeck, L. (1992). A family process model of economic hardship and adjustment of early adolescent boys. *Child Development, 63*(3), 526-541.

Conger, R., & Donnellan, M. (2007). An interactionist perspective on the socioeconomic context of human development. *Annual Review of Psychology, 58*, 175-199.

Conger, R., Elder, G., Lorenz, F., Conger, K., Simons, R., Whitbeck, L., . . . Melby, J. (1990). Linking economic hardship to marital quality and instability. *Journal of Marriage and the Family, 52*(3), 643-656. doi: 10.2307/352931

Conger, R., Ge, X., Elder, G., Lorenz, F., & Simons, R. (1994). Economic-stress, coercive family process, and developmental problems of adolescents. *Child Development, 65*(2), 541-561.

Cox, M., & Paley, B. (1997). Families as systems. *Annual Review of Psychology, 48*, 243-267.

Crnic, K., & Low, C. (2002). Everyday stresses and parenting. In M. Bornstein (Ed.), *Handbook of Parenting: Practical Issues in Parenting* (2nd ed., Vol. 5, pp. 243-267). Mahway, NJ: Lawrance Erlbaum Associates.

Cummings, E., Goeke-Morey, M., & Raymond, J. (2004). Fathers in family context: Effects of marital quality and marital conflict. In M. Lamb (Ed.), *The role of the father in child development* (4th ed., pp. 196-221). New York: Wley.

Daley, T. (2006). Perceptions and congruence of symptoms and communication among second-generation Cambodian youth and parents: A matched-control design. *Child Psychiatry & Human Development, 37*(1), 39-53. doi: 10.1007/s10578-006-0018-5

de Brock, A., Vermulst, A., Gerris, J., & Abidin, R. (1992). Nijmeegse Opvoeding Screenings Instrument. Manual.

Deater-Deckard, K. (1998). Parenting stress and child adjustment: Some old hypotheses and new questions. *Clinical Psychologist, 5*, 314-332.

Elder, G., Eccles, J., Ardelt, M., & Lord, S. (1995). Inner-city parents under economic pressure. Perspectives on the strategies of parenting. *Journal of Marriage and the Family, 57*(3), 771-784.

Erel, O., & Burman, B. (1995). Interrelatedness of marital relations and parent-child relations. A meta-analytic review. *Psychological Bulletin, 118*(1), 108-132.

Eurostat. (2008). *Survey on Income and Living Conditions (SILC) Questionnaire Manual 2008.* http://www.cso.ie/en/surveysandmethodology.

Falconier, M., & Epstein, N. (2010). Relationship satisfaction in Argentinean couples under economic strain: Gender differences in a dyadic stress model. *Journal of Social and Personal Relationships, 27*(6), 781-799. doi: 10.1177/0265407510373260

Falconier, M., & Epstein, N. (2011). Female-demand/male-withdraw communication in Argentinian couples: A mediating factor between economic strain and relationship distress. *Personal Relationships, 18*(4), 586-603. doi: 10.1111/j.1475-6811.2010.01326.x

Faugier, J., & Sargeant, M. (1997). Sampling hard to reach populations. *Journal of Advanced Nursing, 26*(4), 790-797.

Gershoff, E., Aber, J., Raver, C., & Lennon, M. (2007). Income is not enough: Incorporating material hardship into models of income associations with parenting and child development. *Child Development, 78*(1), 70-95.

Goedemé, T. (2011). How much confidence can we have in EU-SILC? Complex sample designs and the standard error of the Europe 2020 poverty indicators. *Social indicators research, 110*(1), 89-110. doi: 10.1007/s11205-011-9918-2

Hays, S. (1996). *The cultural contradictions of motherhood*. New Haven: Yale University Press.

Jackson, S., Bijstra, J., Oostra, L., & Bosma, H. (1998). Adolescents' perceptions of communication with parents relative to specific aspects of relationships with parents and personal development. *Journal of Adolescence, 21*(3), 305-322.

Kalmijn, M., & Liefbroer, A. (2011). Nonresponse of Secondary Respondents in Multi-Actor Surveys: Determinants, Consequences, and Possible Remedies. *Journal of Family Issues, 32*(6), 735-766. doi: 10.1177/0192513x10390184

Kenny, D., Kashy, D., & Cook, W. (2006). *Dyadic data analysis*. New York: The Guilford Press.

Kiernan, K., & Huerta, M. (2008). Economic deprivation, maternal depression, parenting and children's cognitive and emotional development in early childhood. *British Journal of Sociology, 59*(4), 783-806.

Kline, R. (2005). *Principles and practices of structural equation modeling* (2nd ed.). New York: The Guilford Press.

Kwon, H., Rueter, M., Lee, M., Koh, S., & Ok, S. (2003). Marital relationships following the Korean economic crisis: Applying the family stress model. *Journal of Marriage and Family, 65*(2), 316-325. doi: 10.1111/j.1741-3737.2003.00316.x

Lavee, Y., McCubbin, H., & Olson, D. (1987). The effect of stressful life events abd transitions on family functioning and well-being. *Journal of Marriage and the Family, 49*(4), 857-873. doi: 10.2307/351979

Lee, C., Anderson, J., Horowitz, J., & August, G. (2009). Family Income and Parenting: The Role of Parental Depression and Social Support. *Family Relations, 58*(4), 417-430.

Lee, C., Lee, J., & August, G. (2011). Financial Stress, Parental Depressive Symptoms, Parenting Practices, and Children's Externalizing Problem Behaviors: Underlying Processes. *Family Relations, 60*(4), 476-490.

Leinonen, J., Solantaus, T., & Punamaki, R. (2002). The specific mediating paths between economic hardship and the quality of parenting. *International Journal of Behavioral Development, 26*(5), 423-435. doi: 10.1080/01650250143000364

Linver, M., Brooks-Gunn, J., & Kohen, D. (2002). Family processes as pathways from income to young children's development. *Developmental Psychology, 38*(5), 719-734.

Lorenz, F., Conger, R., Simon, R., & Whitbeck, L. (1991). Economic pressure and marital quality: an illustration of the method variance problem in the causal modeling of family processes. *Journal of Marriage and Family, 53*, 375-388.

Luk, J., Farhat, T., Iannotti, R., & Simons-Morton, B. (2008). Parent-child communication and substance use among adolescents: Do father and mother communication play a different role for sons and daughters? *Addictive Behaviors, 35*(5), 426-431.

Malmberg, L., & Flouri, E. (2011). The Comparison and Interdependence of Maternal and Paternal Influences on Young Children's Behavior and Resilience. *Journal of Clinical Child and Adolescent Psychology, 40*(3), 434-444.

McConnell, D., Breitkreuz, R., & Savage, A. (2011). From financial hardship to child difficulties: main and moderating effects of perceived social support. *Child Care Health and Development, 37*(5), 679-691.

Minuchin, S. (1974). *Families and Family therapy*. Cambridge, MA: Harvard University Press.

Mistry, R., Biesanz, J., Taylor, L., Burchinal, M., & Cox, M. (2004). Family income and its relation to preschool children's adjustment for families in the NICHD study of early child care. *Developmental Psychology, 40*(5), 727-745.

Mistry, R., Lowe, E., Benner, A., & Chien, N. (2008). Expanding the family economic stress model: Insights from a mixed-methods approach. *Journal of Marriage and Family, 70*(1), 196-209.

Mistry, R., Vandewater, E., Huston, A., & McLoyd, V. (2002). Economic well-being and children's social adjustment: The role of family process in an ethnically diverse low-income sample. *Child Development, 73*(3), 935-951.

Muthén, L., & Muthén, B. (2010). *Mplus user's guide. Version 6.0*. Los Angeles, CA: Muthén & Muthén.

Nelson, J., O'Brien, M., Blankson, A., Calkins, S., & Keane, S. (2009). Family Stress and Parental Responses to Children's Negative Emotions: Tests of the Spillover, Crossover, and Compensatory Hypotheses. *Journal of Family Psychology, 23*(5), 671-679.

Parke, R., Coltrane, S., Duffy, S., Buriel, R., Dennis, J., Powers, J., . . . Widaman, K. (2004). Economic stress, parenting, and child adjustment in Mexican American and European American families. *Child Development, 75*(6), 1632-1656. doi: 10.1111/j.1467-8624.2004.00807.x

Podsakoff, P., MacKenzie, S., & Podsakoff, N. (2012). Sources of Method Bias in Social Science Research and Recommendations on How to Control It. In S. T. Fiske, D. L. Schacter & S. E. Taylor (Eds.), *Annual Review of Psychology, Vol 63* (Vol. 63, pp. 539-569).

Ponnet, K., Mortelmans, D., Wouters, E., Van Leeuwen, K., Bastaits, K., & Pasteels, I. (2013). Parenting stress and marital relationship as determinants of mothers' and fathers' parenting. *Personal Relationships, 20*(2), 259-276. doi: 10.1111/j.1475-6811.2012.01404.x

Ponnet, K., Wouters, E., Mortelmans, D., Pasteels, I., De Backer, C., Van Leeuwen, K., & Van Hiel, A. (2013). The Influence of Mothers' and Fathers' Parenting Stress and Depressive Symptoms on Own and Partner's Parent–Child Communication. *Family process, 52*(2), 312-324. doi: 10.1111/famp.12001

Ravallion, M., & Lokshin, M. (2002). Self-rated economic welfare in Russia. *European Economic Review, 46*(8), 1453-1473.

Riesch, S., Anderson, L., & Krueger, H. (2006). Parent-child communication processes: Preventing children's health-risk behavior. *Journal for Specialists in Pediatric Nursing, 11*(1), 41-56.

Seginer, R., Vermulst, A., & Gerris, J. (2002). Bringing up adolescent children: A longitudinal study of parents' child-rearing stress. *International Journal of Behavioral Development, 26*(5), 410-422.

Theule, J., Wiener, J., Rogers, M. A., & Marton, I. (2011). Predicting Parenting Stress in Families of Children with ADHD: Parent and Contextual Factors. *Journal of Child and Family Studies, 20*(5), 640-647. doi: 10.1007/s10826-010-9439-7

Xiao, Z., Li, X., & Stanton, B. (2011). Perceptions of parent-adolescent communication within families: It is a matter of perspective. *Psychology Health & Medicine, 16*(1), 53-65.

Yu, S., Clemens, R., Yang, H., Li, X., Stanton, B., Deveaux, L., . . . Harris, C. (2006). Youth and parental perceptions of parental monitoring and parent-adolescent communication, youth depression, and youth risk behaviors. *Social Behavior and Personality, 34*(10), 1297-1310.

Table 1

Correlations among the Variables

	Variables	1	2	3	4	5	6	7	8	9
1	Household income									
2	Financial need MR	-.46**								
3	Financial insecurity MR	-.31**	.68**							
4	Financial burden MR	-.35**	.64**	.61**						
5	Financial need FR	-.49**	.63**	.44**	.46**					
6	Financial insecurity FR	-.32***	.46**	.52**	.48**	.60**				
7	Financial burden FR	-.38**	.54**	.45**	.55**	.64**	.61**			
8	Competence MR	.02	.15**	.23**	.17**	.06	.08	.08		
9	Depression MR	.03	.11*	.26**	.13*	.03	.08	.04	.66**	
10	Competence FR	-.03	.15**	.09	.11	.25**	.30**	.27**	.38**	.28**
11	Depression FR	-.03	.10	.09	.09	.21**	.33**	.23**	.21**	.27**

Table 1

Continued 1

	Variables	1	2	3	4	5	6	7	8	9
12	Open MCcom MR	-.09	.03	.05	.04	.06	.12*	.05	-.41***	-.27**
13	Open MCcom CR	-.08	.09	.10	.06	.05	.08	.04	-.17**	-.14*
14	Problems in MCcom MR	.02	.12*	.15**	.07	.04	.09	.11*	.42**	.36**
15	Problems in MCcom CR	.10	.03	-.02	-.01	.03	.00	.01	.26**	.17**
16	Open FCcom FR	.00	.04	.02	-.04	-.08	-.08	-.05	-.20**	-.14*
17	Open FCcom CR	-.06	.01	.00	-.04	-.03	-.05	-.06	-.12*	-.09
18	Problems in FCcom FR	.00	-.01	-.00	.06	.06	.14**	.06	.29**	.16**
19	Problems in FCcom CR	.02	.10	.08	.14**	.05	.08	.07	.23**	.13*
20	Externalizing CR	-.00	.09	.08	.10	.19**	.14**	.19**	.23**	.13*
21	Externalizing MR	-.08	.15**	.09	.11*	.12*	.06	.09	.41**	.29**
22	Externalizing FR	-.01	.06	.03	.05	.13*	.11*	.15**	.30**	.23**

Table 1

Continued 2

Variables	10	11	12	13	14	15	16	17	18	19	20	21
11	.64**											
12	-.27**	-.13*										
13	-.17**	-.10	.46**									
14	.25**	.17**	-.29**	-.15**								
15	.23**	.16**	-.32**	-.37**	.35**							
16	-.45**	-.29**	.35**	.21**	-.12*	-.16**						
17	-.26**	-.19**	.23**	.53**	-.15**	-.17**	.40**					
18	.44**	.41**	-.21**	-.07	.21**	.10	-.42**	-.20**				
19	.32**	.19**	-.21**	-.19**	.20**	.44**	-.34**	-.40**	33**			
20	.24**	.16**	-.20**	-.24**	.16**	.32**	-.17**	-.25**	16**	28**		
21	.38**	.23**	-.36**	-.12*	.43**	.30**	-.21**	-.16**	28**	26**	35**	
22	.47**	.29**	-.31**	-.06	.30**	.23**	-.33**	-.13*	40**	31**	31**	67**

Note.

Values in rectangles refer to partner effects. FCcom = father-child communication, MCcom = mother-child communication, MR = mother report, FR = father report, CR = child report; *$p < .05$; **$p < .01$

Table 2

Direct, Indirect and Total Effects of Financial Stress on Adolescent Outcomes

	Externalizing problem behavior		
	Std. Est.	S.E.	
Financial stress to adolescent outcome (via open family communication)			
Total	0.127	0.033	***
Total direct	0.011	0.032	
Total indirect	0.117	0.020	***
Fin. stress → par. stress → adolescent outcome	0.087	0.019	***
Fin. stress → par. stress → family communication → adolescent outcome	0.027	0.009	**
Parenting stress to adolescent outcome (via problems in family communication)			
Total	0.120	0.032	***
Total direct	-0.001	0.030	
Total indirect	0.120	0.020	***
Fin. stress → par. stress → adolescent outcome	0.003	0.032	
Fin. stress → par. stress → own family communication → adolescent outcome	0.091	0.027	**
Fin. stress → par. stress → partner's family communication→ adolescent outcome	0.026	0.012	*

*p < .05; **p < .01; ***p < .001

Figure 1

A family system approach to investigate family stress processes

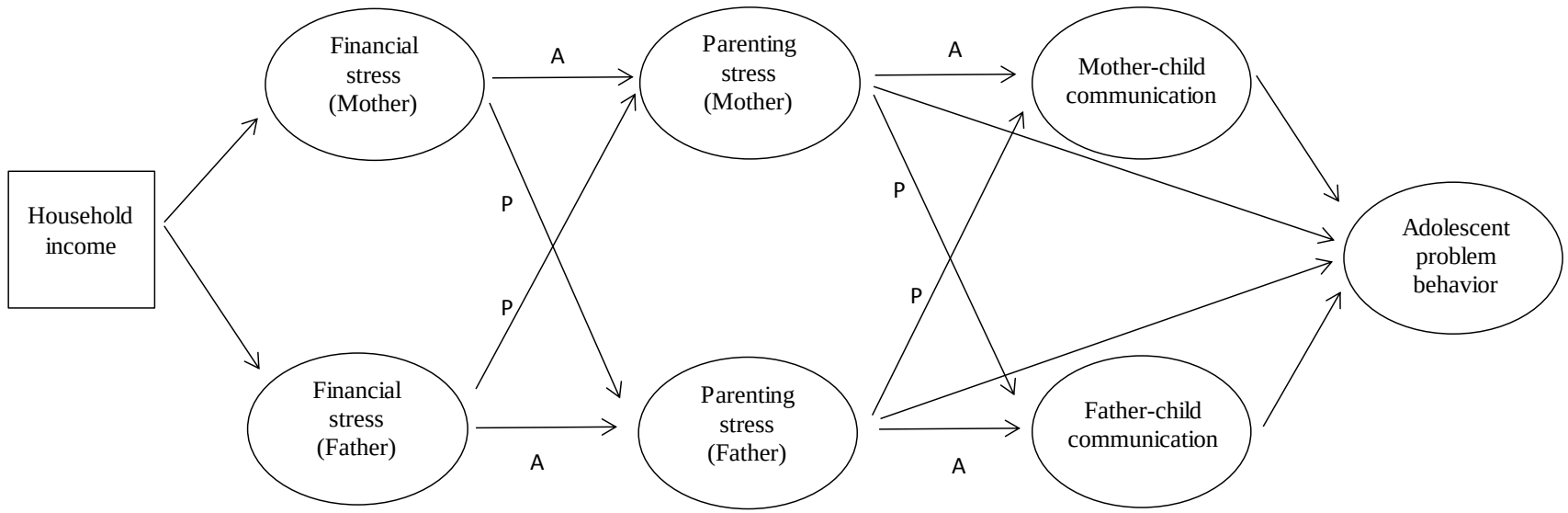

Note

A = Actor effect; P = Partner effect

Figure 2

Financial stress relating to externalizing problem behavior via parenting stress and open family communication

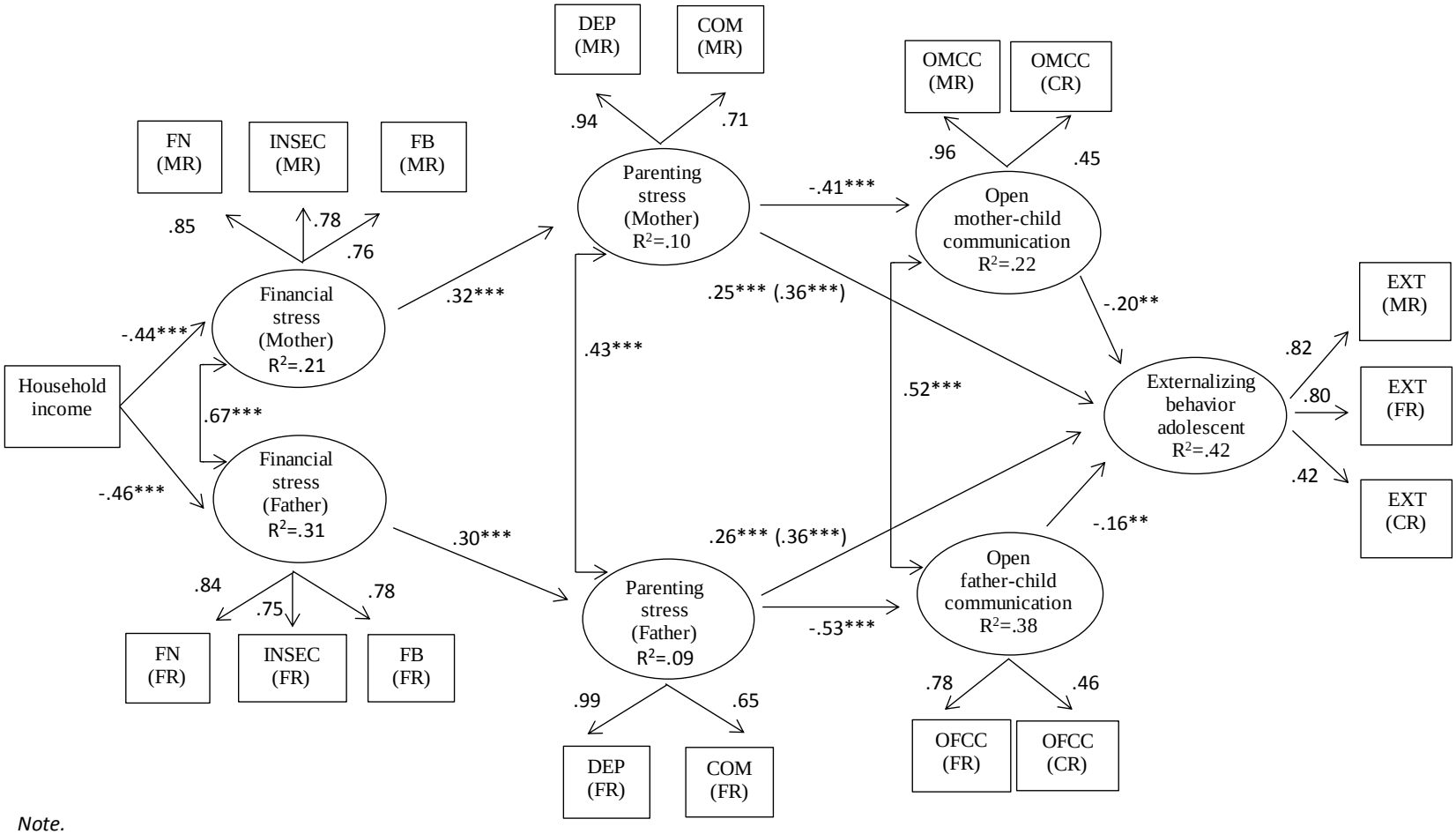

Note.
FN = financial need, INSEC = financial insecurity, FB = financial burden, DEP = depression, COM = lack of competence, OMCC = open mother-child communication, OFCC = open father-child communication, EXT = externalizing behavior of adolescent MR = mother report, FR = father report, CR = child report. All reported coefficients are standardized values, adjusted for the influence of covariates. Coefficients in brackets represent standardized values without open family communication as mediator. $^{**}p < .01$; $^{***}p < .001$

Figure 3

Financial stress relating to externalizing problem behavior via parenting stress and problems in family communication.

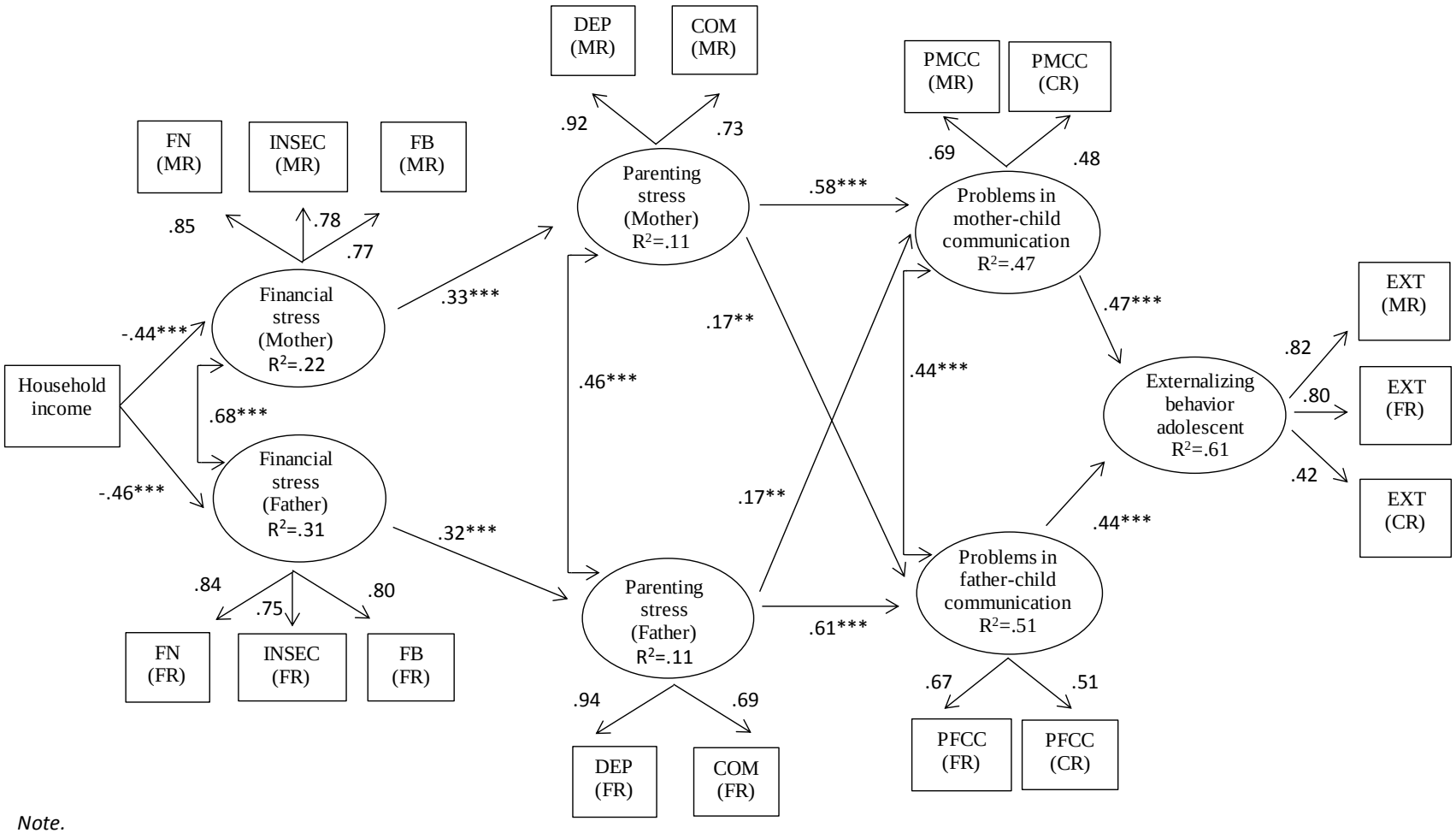

Note.

FN = financial need, INSEC = financial insecurity, FB = financial burden, DEP = depression, COM = lack of competence, PMCC = problems in mother-child communication, PFCC = problems in father-child communication, EXT = externalizing behavior of adolescent, MR = mother report, FR = father report, CR = child report. All reported coefficients are standardized values, adjusted for the influence of covariates. $^{**}p < .01$; $^{***}p < .001$